CDX-GT41UW/GT410U/ GT460U/GT460US

SERVICE MANUAL

Ver. 1.2 2007.03

US Model
Canadian Model
CDX-GT41UW/GT410U
E Model
CDX-GT460U/GT460US
Chinese Model
CDX-GT460U

(Photo: CDX-GT460U)

• The tuner and CD sections have no adjustments.

Model Name Using Similar Mechanism	NEW
CD Drive Mechanism Type	MG-101U-188//Q
Optical Pick-up Name	DAX-25A

AUDIO POWER SPECIFICATIONS (US MODEL)
POWER OUTPUT AND TOTAL HARMONIC DISTORTION
23.2 watts per channel minimum continuous average power into 4 ohms, 4 channels driven from 20 Hz to 20 kHz with no more than 5% total harmonic distortion.

SPECIFICATIONS

CD player section

Signal-to-noise ratio	120 dB
Frequency response	10 – 20,000 Hz
Wow and flutter	Below measurable limit

Tuner section
FM

Tuning range	GT41UW/GT410U: 87.5 – 107.9 MHz GT460U/GT460US: 87.5 – 108.0 MHz (at 50 kHz step) 87.5 – 107.9 MHz (at 200 kHz step)
FM tuning interval	GT460U/GT460US: 50 kHz/200 kHz switchable
Antenna terminal	External antenna connector
Intermediate frequency	10.7 MHz/450 kHz
Usable sensitivity	9 dBf
Selectivity	75 dB at 400 kHz
Signal-to-noise ratio	67 dB (stereo), 69 dB (mono)
Harmonic distortion at 1 kHz	0.5% (stereo), 0.3% (mono)
Separation	35 dB at 1 kHz
Frequency response	30 – 15,000 Hz

AM

Tuning range	GT41UW/GT410U: 530 – 1,710 kHz GT460U/GT460US: 531 – 1,602 kHz (at 9 kHz step) 530 – 1,710 kHz (at 10 kHz step)
AM tuning interval	GT460U/GT460US: 9 kHz/10 kHz switchable
Antenna terminal	External antenna connector
Intermediate frequency	10.7 MHz/450 kHz
Sensitivity	30 µV

USB player section

Interface	USB (Full-speed)
Maximum current	500 mA

Power amplifier section

Outputs	Speaker outputs (sure seal connectors)
Speaker impedance	4 – 8 ohms
Maximum power output	52 W × 4 (at 4 ohms)

– Continued on next page –

FM/AM COMPACT DISC PLAYER

9-887-470-03
2007C04-1
© 2007.03

Sony Corporation
eVehicle Division
Published by Sony Techno Create Corporation

SONY®

General

Outputs	Audio outputs terminal (sub/rear switchable) Power antenna relay control terminal Power amplifier control terminal
Inputs	BUS control input terminal BUS audio input terminal Antenna input terminal AUX input jack (stereo mini jack)
Tone controls	Low: ±10 dB at 60 Hz (XPLOD) Mid: ±10 dB at 1 kHz (XPLOD) High: ±10 dB at 10 kHz (XPLOD)
Power requirements	12 V DC car battery (negative ground)
Dimensions	Approx. 178 × 50 × 179 mm (7 1/8 × 2 × 7 1/8 in.) (w/h/d)
Mounting dimensions	Approx. 182 × 53 × 162 mm (7 1/4 × 2 1/8 × 6 1/2 in.) (w/h/d)
Mass	Approx. 1.2 kg (2 lb. 11 oz.)
Supplied accessories	Card remote commander: RM-X151 Parts for installation and connections (1 set) USB cap

Design and specifications are subject to change without notice.

US and foreign patents licensed from Dolby Laboratories.

SERVICE NOTES

NOTES ON HANDLING THE OPTICAL PICK-UP BLOCK OR BASE UNIT

The laser diode in the optical pick-up block may suffer electrostatic breakdown because of the potential difference generated by the charged electrostatic load, etc. on clothing and the human body.
During repair, pay attention to electrostatic breakdown and also use the procedure in the printed matter which is included in the repair parts.
The flexible board is easily damaged and should be handled with care.

NOTES ON LASER DIODE EMISSION CHECK

The laser beam on this model is concentrated so as to be focused on the disc reflective surface by the objective lens in the optical pick-up block. Therefore, when checking the laser diode emission, observe from more than 30 cm away from the objective lens.

Notes on Chip Component Replacement

- Never reuse a disconnected chip component.
- Notice that the minus side of a tantalum capacitor may be damaged by heat.

TEST DISCS

Please use the following test discs for the check on the CD section.

YDES-18 (Part No. 3-702-101-01)
PATD-012 (Part No. 4-225-203-01)

CAUTION

Use of controls or adjustments or performance of procedures other than those specified herein may result in hazardous radiation exposure.

If the optical pick-up block is defective, please replace the whole optical pick-up block.
Never turn the semi-fixed resistor located at the side of optical pick-up block.

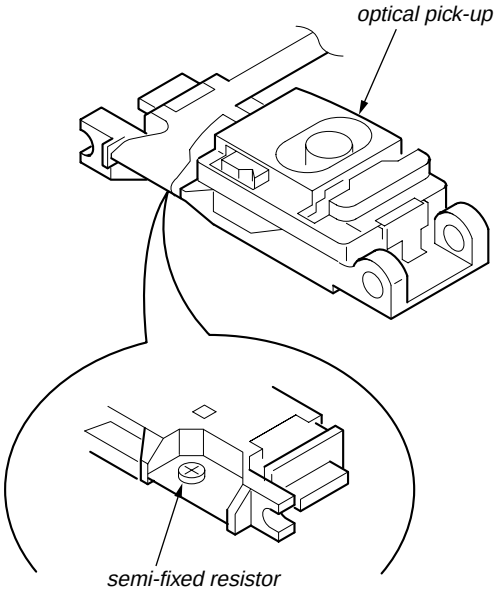

SAFETY-RELATED COMPONENT WARNING!!

COMPONENTS IDENTIFIED BY MARK ⚠ OR DOTTED LINE WITH MARK ⚠ ON THE SCHEMATIC DIAGRAMS AND IN THE PARTS LIST ARE CRITICAL TO SAFE OPERATION. REPLACE THESE COMPONENTS WITH SONY PARTS WHOSE PART NUMBERS APPEAR AS SHOWN IN THIS MANUAL OR IN SUPPLEMENTS PUBLISHED BY SONY.

ATTENTION AU COMPOSANT AYANT RAPPORT À LA SÉCURITÉ!!

LES COMPOSANTS IDENTIFIÉS PAR UNE MARQUE ⚠ SUR LES DIAGRAMMES SCHÉMATIQUES ET LA LISTE DES PIÈCES SONT CRITIQUES POUR LA SÉCURITÉ DE FONCTIONNEMENT. NE REMPLACER CES COMPOSANTS QUE PAR DES PIÈCES SONY DONT LES NUMÉROS SONT DONNÉS DANS CE MANUEL OU DANS LES SUPPLÉMENTS PUBLIÉS PAR SONY.

This compact disc player is classified as a CLASS 1 LASER product. The CLASS 1 LASER PRODUCT label is located on the exterior.

E model

CLASS 1
LASER PRODUCT

This label is located on the bottom of the chassis.

Chinese model

1类激光产品

此标签位于机壳的底部。

- **CD playback**
  You can play CD-DA (also containing CD TEXT*), CD-R/CD-RW (MP3/WMA/AAC files also containing Multi Session) and ATRAC CD (ATRAC3 and ATRAC3plus format).

Type of discs	Label on the disc
CD-DA	COMPACT disc DIGITAL AUDIO Recordable / COMPACT disc DIGITAL AUDIO ReWritable
MP3 WMA AAC ATRAC CD	COMPACT disc DIGITAL AUDIO Recordable / COMPACT disc DIGITAL AUDIO ReWritable COMPACT disc Recordable / COMPACT disc ReWritable

* A CD TEXT disc is a CD-DA that includes information such as disc, artist and track name.

EXTENSION CABLE AND SERVICE POSITION

When repairing or servicing this set, connect the jig (extension cable) as shown below.

- Connect the MAIN board (CN350) and the SERVO board (CN2) with the extension cable (Part No. J-2502-076-1).

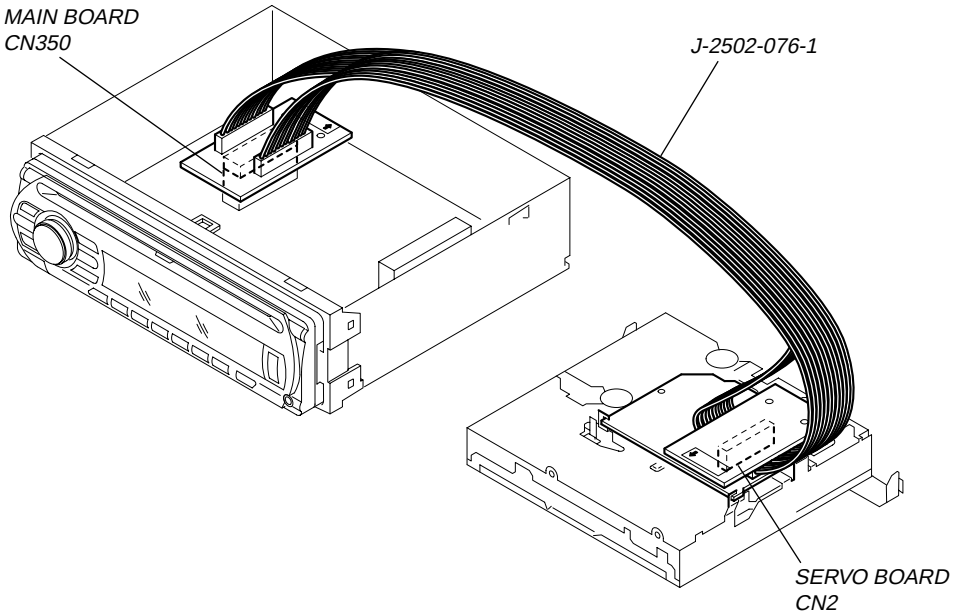

● UNLEADED SOLDER

Boards requiring use of unleaded solder are printed with the lead-free mark (LF) indicating the solder contains no lead.
(Caution: Some printed circuit boards may not come printed with the lead free mark due to their particular size.)

LF : LEAD FREE MARK

Unleaded solder has the following characteristics.

- Unleaded solder melts at a temperature about 40°C higher than ordinary solder.
  Ordinary soldering irons can be used but the iron tip has to be applied to the solder joint for a slightly longer time.
  Soldering irons using a temperature regulator should be set to about 350°C.
  Caution: The printed pattern (copper foil) may peel away if the heated tip is applied for too long, so be careful!
- Strong viscosity
  Unleaded solder is more viscous (sticky, less prone to flow) than ordinary solder so use caution not to let solder bridges occur such as on IC pins, etc.
- Usable with ordinary solder
  It is best to use only unleaded solder but unleaded solder may also be added to ordinary solder.

NOTE FOR REPLACEMENT OF THE SERVO BOARD

When repairing, the complete SERVO board (A-1206-357-A) should be replaced since any parts in the SERVO board cannot be repaired.

NOTE FOR REPLACEMENT OF THE USB CONNECTOR (CN902)

To replace the USB connector requires alignment.

1. Insert the USB connector into the front panel.
2. Place the KEY board on the front panel and align the terminals of the USB connector with the holes in the KEY board.
3. Solder the four terminals of the connector.

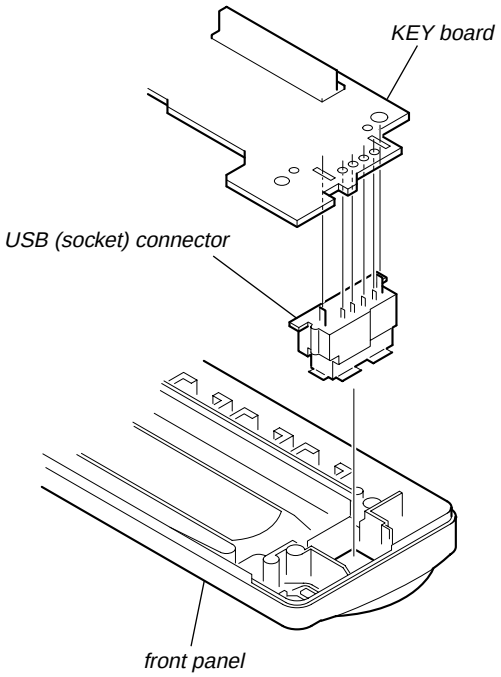

NOTE FOR THE 24-PIN CONNECTOR (CN901)

Do not use alcohol to clean the 24-pin connector (CN901) connecting the front panel with the main body.
Do not touch the connector directly with your bare hand. Poor contact may be caused.

TABLE OF CONTENTS

1. GENERAL
Location of Controls 5
Connections 6

2. DISASSEMBLY
2-1. Sub Panel (FL) Assy 11
2-2. CD Mechanism Block 11
2-3. Main Board 12
2-4. Servo Board 12
2-5. Chassis (T) Sub Assy 13
2-6. Roller Arm Assy 13
2-7. Chassis (OP) Assy 14

3. DIAGNOSIS FUNCTION 15

4. DIAGRAMS
4-1. Block Diagram –Main Section– 19
4-2. Block Diagram –Display Section– 20
4-3. Printed Wiring Board –Main Section– 22
4-4. Schematic Diagram –Main Section (1/3)– 23
4-5. Schematic Diagram –Main Section (2/3)– 24
4-6. Schematic Diagram –Main Section (3/3)– 25
4-7. Printed Wiring Board –Key Section– 26
4-8. Schematic Diagram –Key Section– 27

5. EXPLODED VIEWS
5-1. Main Section 32
5-2. Front Panel Section 33
5-3. CD Mechanism Section (MG-101U-188//Q) 34

6. ELECTRICAL PARTS LIST 35

SECTION 1
GENERAL

This section is extracted from instruction manual.

• LOCATION OF CONTROLS
• CDX-GT41UW/GT410U

Location of controls and basic operations

Main unit

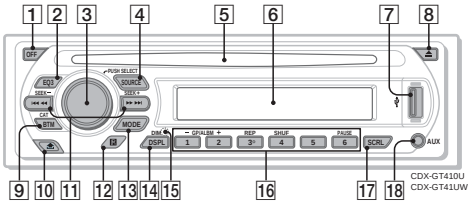

Card remote commander RM-X151

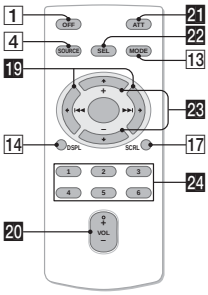

Refer to the pages listed for details. The corresponding buttons on the card remote commander control the same functions as those on the unit.

1 **OFF button**
To power off; stop the source.

2 **EQ3 (equalizer) button** 10
To select an equalizer type (XPLOD, VOCAL, EDGE, CRUISE, SPACE, GRAVITY, CUSTOM or OFF).

3 **Volume control dial/select button** 10
To adjust volume (rotate); select setup items (press and rotate).

4 **SOURCE button**
To power on; change the source (Radio/CD/MD*1/USB/AUX/SAT*2).

5 **Disc slot**
Insert the disc (label side up), playback starts.

6 **Display window**

7 **USB terminal** 9
To connect to the USB device.

8 **⏏ (eject) button**
To eject the disc.

9 **BTM/CAT*2 button** 8
To start the BTM function (press and hold).

10 **(front panel release) button** 5

11 **SEEK –/+ buttons**
CD/MD*1/USB*3:
To skip tracks (press); skip tracks continuously (press, then press again within about 1 second and hold); reverse/fast-forward a track (press and hold).
Radio:
To tune in stations automatically (press); find a station manually (press and hold).

12 **Receptor for the card remote commander**

13 **MODE button** 8, 10, 12
To select the radio band (FM/AM); select the SAT tuner band (mode)*2; select the unit*4; select the play mode*5.

14 **DSPL (display)/DIM (dimmer) button** 8, 9
To change display items (press); change the display brightness (press and hold).

15 **RESET button** (located behind the front panel) 4

16 **Number buttons**
CD/MD*1/USB*3:
①/②: **GP*6/ALBM*7 –/+**
To skip albums (press); skip albums continuously (press and hold)*8.
③: **REP** 8, 10
④: **SHUF** 8, 10
⑥: **PAUSE*9**
To pause playback. To cancel, press again.
Radio:
To receive stored stations (press); store stations (press and hold).

17 **SCRL (scroll) button** 8, 9
To scroll the display item.

18 **AUX input jack** 11
To connect a portable audio device.

The following buttons on the card remote commander have also different buttons/functions from the unit. Remove the insulation film before use (page 4).

19 **← (⏮)/→ (⏭) buttons**
To control CD/radio/MD/USB, the same as (SEEK) –/+ on the unit.

20 **VOL (volume) +/– button**
To adjust volume.

21 **ATT (attenuate) button**
To attenuate the sound. To cancel, press again.

22 **SEL (select) button**
The same as the select button on the unit.

23 **↑ (+)/↓ (–) buttons**
To control CD, the same as ①/② (GP/ALBM –/+) on the unit.

24 **Number buttons**
To receive stored stations (press); store stations (press and hold).

*1 *When an MD changer is connected.*
*2 *When the SAT tuner is connected.*
*3 *When a USB device is connected.*
*4 *When a CD/MD changer is connected.*
*5 *When an ATRAC Audio Device is connected.*
*6 *When an ATRAC CD is played.*
*7 *When an MP3/WMA/AAC is played.*
*8 *If the changer/USB device is connected, the operation is different, see page 12.*
*9 *When playing back on this unit.*

Notes
- *When ejecting/inserting a disc, keep any USB devices disconnected to avoid damage to the disc.*
- *If the unit is turned off and the display disappears, it cannot be operated with the card remote commander unless (SOURCE) on the unit is pressed, or a disc is inserted to activate the unit first.*

Tip
For details on how to replace the battery, see "Replacing the lithium battery of the card remote commander" on page 15.

About USB cap
When not using the USB terminal (7), use the supplied USB cap to prevent dust or dirt entering. Keep the USB cap out of the reach of children to prevent accidental swallowing.

• CDX-GT460U/GT460US

Location of controls and basic operations

Main unit

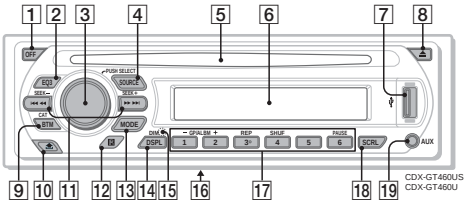

Card remote commander RM-X151

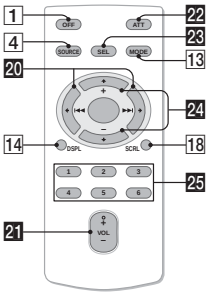

Refer to the pages listed for details. The corresponding buttons on the card remote commander control the same functions as those on the unit.

1 **OFF button**
To power off; stop the source.

2 **EQ3 (equalizer) button** 10
To select an equalizer type (XPLOD, VOCAL, EDGE, CRUISE, SPACE, GRAVITY, CUSTOM or OFF).

3 **Volume control dial/select button** 10
To adjust volume (rotate); select setup items (press and rotate).

4 **SOURCE button**
To power on; change the source (Radio/CD/MD*1/USB/AUX).

5 **Disc slot**
Insert the disc (label side up), playback starts.

6 **Display window**

7 **USB terminal**
To connect to the USB device. 9

8 **⏏ (eject) button**
To eject the disc.

9 **BTM button** 8
To start the BTM function (press and hold).

10 **(front panel release) button** 5

11 **SEEK –/+ buttons**
CD/MD*1/USB*2:
To skip tracks (press); skip tracks continuously (press, then press again within about 1 second and hold); reverse/fast-forward a track (press and hold).
Radio:
To tune in stations automatically (press); find a station manually (press and hold).

12 **Receptor for the card remote commander**

13 **MODE button** 8, 12
To select the radio band (FM/AM); select the unit*3; select the play mode*4.

14 **DSPL (display)/DIM (dimmer) button** 8
To change display items (press); change the display brightness (press and hold).

15 **RESET button** (located behind the front panel) 4

16 **Frequency select switch** (located on the bottom of the unit)
See "Frequency select switch" in the supplied installation/connections manual.

17 **Number buttons**
CD/MD*1/USB*2:
①/②: **GP*5/ALBM*6 –/+**
To skip albums (press); skip albums continuously (press and hold)*7.
③: **REP** 8
④: **SHUF** 8
⑥: **PAUSE*8**
To pause playback. To cancel, press again.
Radio:
To receive stored stations (press); store stations (press and hold).

18 **SCRL (scroll) button** 8
To scroll the display item.

19 **AUX input jack** 12
To connect a portable audio device.

The following buttons on the card remote commander have also different buttons/functions from the unit. Remove the insulation film before use (page 4).

20 **← (⏮)/→ (⏭) buttons**
To control CD/radio/MD/USB, the same as (SEEK) –/+ on the unit.

21 **VOL (volume) +/– button**
To adjust volume.

22 **ATT (attenuate) button**
To attenuate the sound. To cancel, press again.

23 **SEL (select) button**
The same as the select button on the unit.

24 **↑ (+)/↓ (–) buttons**
To control CD, the same as ①/② (GP/ALBM –/+) on the unit.

25 **Number buttons**
To receive stored stations (press); store stations (press and hold).

*1 *When an MD changer is connected.*
*2 *When a USB device is connected.*
*3 *When a CD/MD changer is connected.*
*4 *When an ATRAC Audio Device is connected.*
*5 *When an ATRAC CD is played.*
*6 *When an MP3/WMA/AAC is played.*
*7 *If the changer/USB device is connected, the operation is different, see page 12.*
*8 *When playing back on this unit.*

Notes
- *When ejecting/inserting a disc, keep any USB devices disconnected to avoid damage to the disc.*
- *If the unit is turned off and the display disappears, it cannot be operated with the card remote commander unless (SOURCE) on the unit is pressed, or a disc is inserted to activate the unit first.*

Tip
For details on how to replace the battery, see "Replacing the lithium battery of the card remote commander" on page 15.

About USB cap
When not using the USB terminal (7), use the supplied USB cap to prevent dust or dirt entering. Keep the USB cap out of the reach of children to prevent accidental swallowing.

• **CONNECTIONS**
• **CDX-GT41UW/GT410U**

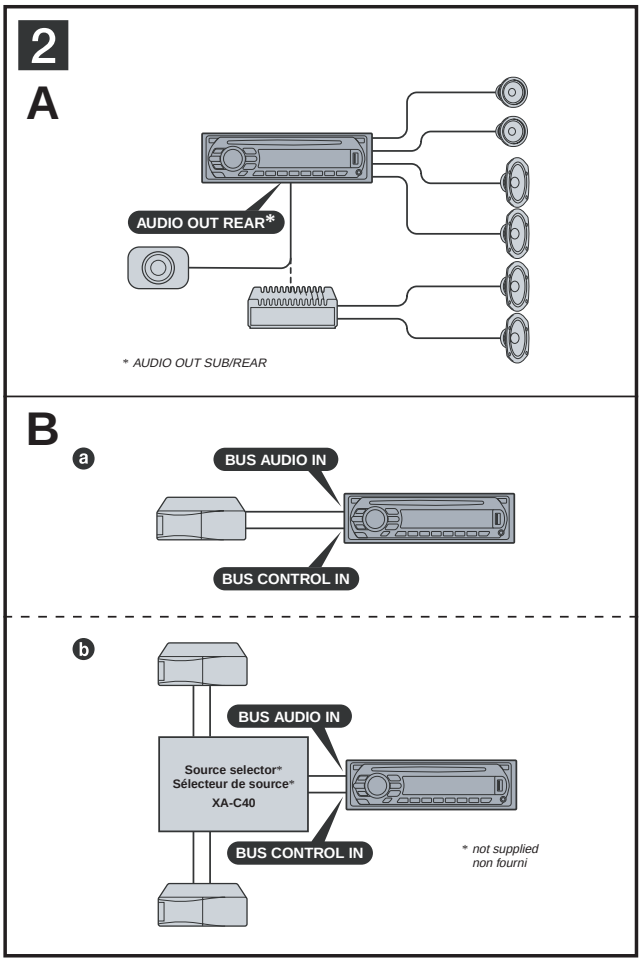

Connection example 2

Notes **(2-A)**
- *Be sure to connect the ground (earth) lead before connecting the amplifier.*
- *The alarm will only sound if the built-in amplifier is used.*

Tip **(2-B-b)**
For connecting two or more CD/MD changers, the source selector XA-C40 (not supplied) is necessary.

Exemple de raccordement 2

Remarques **(2-A)**
- *Raccordez d'abord le câble de mise à la masse avant de raccorder l'amplificateur.*
- *L'alarme est émise uniquement lorsque l'amplificateur intégré est utilisé.*

Conseil **(2-B-b)**
Dans le cas du raccordement de deux changeurs de CD/MD ou plus, le sélecteur de source XA-C40 (non fourni) est requis.

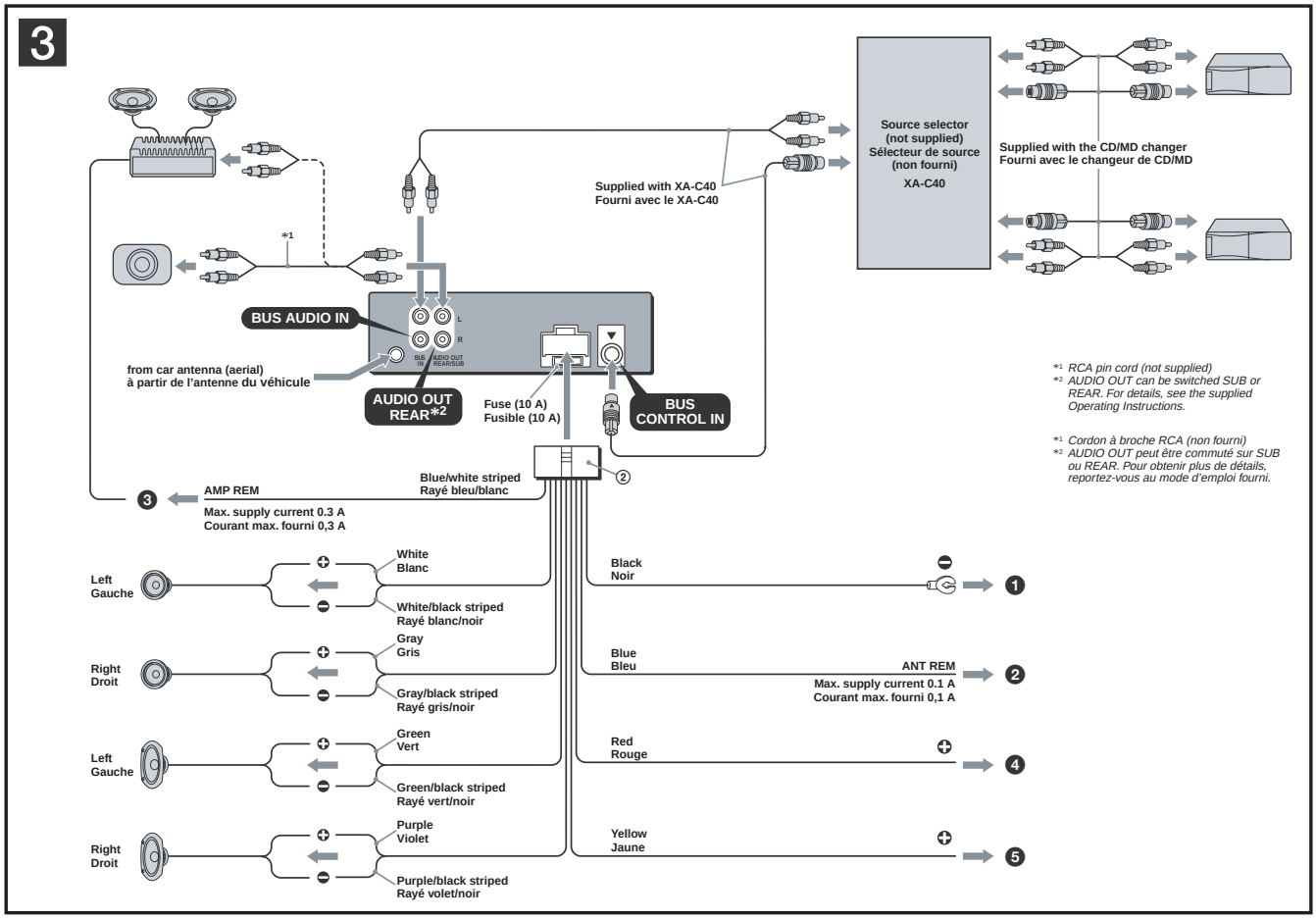

Connection diagram 3

❶ **To a metal surface of the car**
First connect the black ground (earth) lead, then connect the yellow and red power supply leads.

❷ **To the power antenna (aerial) control lead or power supply lead of antenna (aerial) booster**
Notes
- *It is not necessary to connect this lead if there is no power antenna (aerial) or antenna (aerial) booster, or with a manually-operated telescopic antenna (aerial).*
- *When your car has a built-in FM/AM antenna (aerial) in the rear/side glass, see "Notes on the control and power supply leads."*

❸ **To AMP REMOTE IN of an optional power amplifier**
This connection is only for amplifiers. Connecting any other system may damage the unit.

❹ **To the +12 V power terminal which is energized in the accessory position of the ignition switch**
Notes
- *If there is no accessory position, connect to the +12 V power (battery) terminal which is energized at all times. Be sure to connect the black ground (earth) lead to a metal surface of the car first.*
- *When your car has a built-in FM/AM antenna (aerial) in the rear/side glass, see "Notes on the control and power supply leads."*

❺ **To the +12 V power terminal which is energized at all times**
Be sure to connect the black ground (earth) lead to a metal surface of the car first.

Notes on the control and power supply leads
- *The power antenna (aerial) control lead (blue) supplies +12 V DC when you turn on the tuner.*
- *When your car has built-in FM/AM antenna (aerial) in the rear/side glass, connect the power antenna (aerial) control lead (blue) or the accessory power supply lead (red) to the power terminal of the existing antenna (aerial) booster. For details, consult your dealer.*
- *A power antenna (aerial) without a relay box cannot be used with this unit.*

Memory hold connection
When the yellow power supply lead is connected, power will always be supplied to the memory circuit even when the ignition switch is turned off.

Notes on speaker connection
- *Before connecting the speakers, turn the unit off.*
- *Use speakers with an impedance of 4 to 8 ohms, and with adequate power handling capacities to avoid its damage.*
- *Do not connect the speaker terminals to the car chassis, or connect the terminals of the right speakers with those of the left speaker.*
- *Do not connect the ground (earth) lead of this unit to the negative (–) terminal of the speaker.*
- *Do not attempt to connect the speakers in parallel.*
- *Connect only passive speakers. Connecting active speakers (with built-in amplifiers) to the speaker terminals may damage the unit.*
- *To avoid a malfunction, do not use the built-in speaker leads installed in your car if the unit shares a common negative (–) lead for the right and left speakers.*
- *Do not connect the unit's speaker leads to each other.*

Note on connection
If speaker and amplifier are not connected correctly, "FAILURE" appears in the display. In this case, make sure the speaker and amplifier are connected correctly.

Schéma de raccordement 3

❶ **À un point métallique de la voiture**
Branchez d'abord le câble de mise à la masse noir et, ensuite, les câbles d'alimentation jaune et rouge.

❷ **Au câble de commande d'antenne électrique ou au câble d'alimentation de l'amplificateur d'antenne**
Remarques
- *Il n'est pas nécessaire de raccorder ce câble s'il n'y a pas d'antenne électrique ni d'amplificateur d'antenne, ou avec une antenne télescopique manuelle.*
- *Si votre voiture est équipée d'une antenne FM/AM intégrée dans la vitre arrière/latérale, voir « Remarques sur les câbles de commande et d'alimentation ».*

❸ **Au niveau de AMP REMOTE IN de l'amplificateur de puissance en option**
Ce raccordement s'applique uniquement aux amplificateurs. Le branchement de tout autre système risque d'endommager l'appareil.

❹ **À la borne +12 V qui est alimentée quand la clé de contact est sur la position accessoires**
Remarques
- *S'il n'y a pas de position accessoires, raccordez la borne d'alimentation (batterie) +12 V qui est alimentée en permanence.*
  Raccordez d'abord le câble de mise à la masse noir à un point métallique du véhicule.
- *Si votre voiture est équipée d'une antenne FM/AM intégrée dans la vitre arrière/latérale, voir « Remarques sur les câbles de commande et d'alimentation ».*

❺ **À la borne +12 V qui est alimentée en permanence**
Raccordez d'abord le câble de mise à la masse noir à un point métallique du véhicule.

Remarques sur les câbles de commande et d'alimentation
- *Le câble de commande d'antenne électrique (bleu) fournit une alimentation de + 12 V CC lorsque vous mettez la radio sous tension.*
- *Lorsque votre voiture est équipée d'une antenne FM/AM intégrée dans la vitre arrière/latérale, raccordez le câble de commande d'antenne (bleu) ou le câble d'alimentation des accessoires (rouge) à la borne d'alimentation de l'amplificateur d'antenne existant. Pour plus de détails, consultez votre détaillant.*
- *Une antenne électrique sans boîtier de relais ne peut pas être utilisée avec cet appareil.*

Raccordement pour la conservation de la mémoire
Lorsque le câble d'alimentation jaune est raccordé, le circuit de la mémoire est alimenté en permanence même si la clé de contact est sur la position d'arrêt.

Remarques sur le raccordement des haut-parleurs
- *Avant de raccorder les haut-parleurs, mettez l'appareil hors tension.*
- *Utilisez des haut-parleurs ayant une impédance de 4 à 8 ohms avec une capacité électrique adéquate pour éviter de les endommager.*
- *Ne raccordez pas les bornes du système de haut-parleurs au châssis de la voiture et ne raccordez pas les bornes du haut-parleur droit à celles du haut-parleur gauche.*
- *Ne raccordez pas le câble de mise à la masse de cet appareil à la borne négative (–) du haut-parleur.*
- *N'essayez pas de raccorder les haut-parleurs en parallèle.*
- *Raccordez uniquement des haut-parleurs passifs. Le raccordement de haut-parleurs actifs (avec amplificateurs intégrés) aux bornes des haut-parleurs peut endommager l'appareil.*
- *Pour éviter tout problème de fonctionnement, n'utilisez pas les câbles des haut-parleurs intégrés installés dans votre voiture si l'appareil partage un câble négatif commun (–) pour les haut-parleurs droit et gauche.*
- *Ne raccordez pas entre eux les cordons des haut-parleurs de l'appareil.*

Remarque sur le raccordement
Si les haut-parleurs ne sont pas raccordés correctement, le message « FAILURE » s'affiche. Dans ce cas, assurez-vous que les haut-parleurs sont bien raccordés.

• **CDX-GT460U/GT460US**

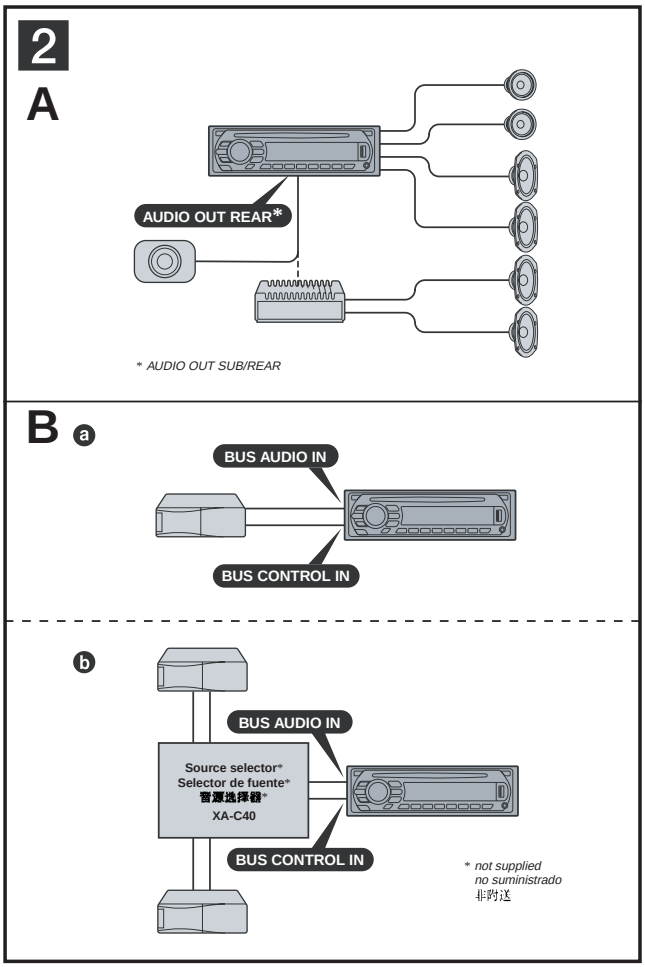

Connection example 2

Notes **(2-A)**
- *Be sure to connect the ground (earth) lead before connecting the amplifier.*
- *The alarm will only sound if the built-in amplifier is used.*

Tip **(2-B-b)**
For connecting two or more CD/MD changers, the source selector XA-C40 (not supplied) is necessary.

Ejemplo de conexiones 2

Notas **(2-A)**
- *Asegúrese de conectar primero el cable de conexión a masa antes de realizar la conexión del amplificador.*
- *La alarma sonará únicamente si se utiliza el amplificador incorporado.*

Sugerencia **(2-B-b)**
Si desea conectar dos o más cambiadores de CD/MD, necesitará el selector de fuente XA-C40 (no suministrado).

线路连接图例 2

注（2-A）
- 务必在连接放大器之前连接接地线。
- 只有在使用内置的放大器时，警报才会发出声响。

提示（2-B-b）
若要连接 2 台或更多 CD/MD 换碟机，必须使用音源选择器 XA-C40（非附送）。

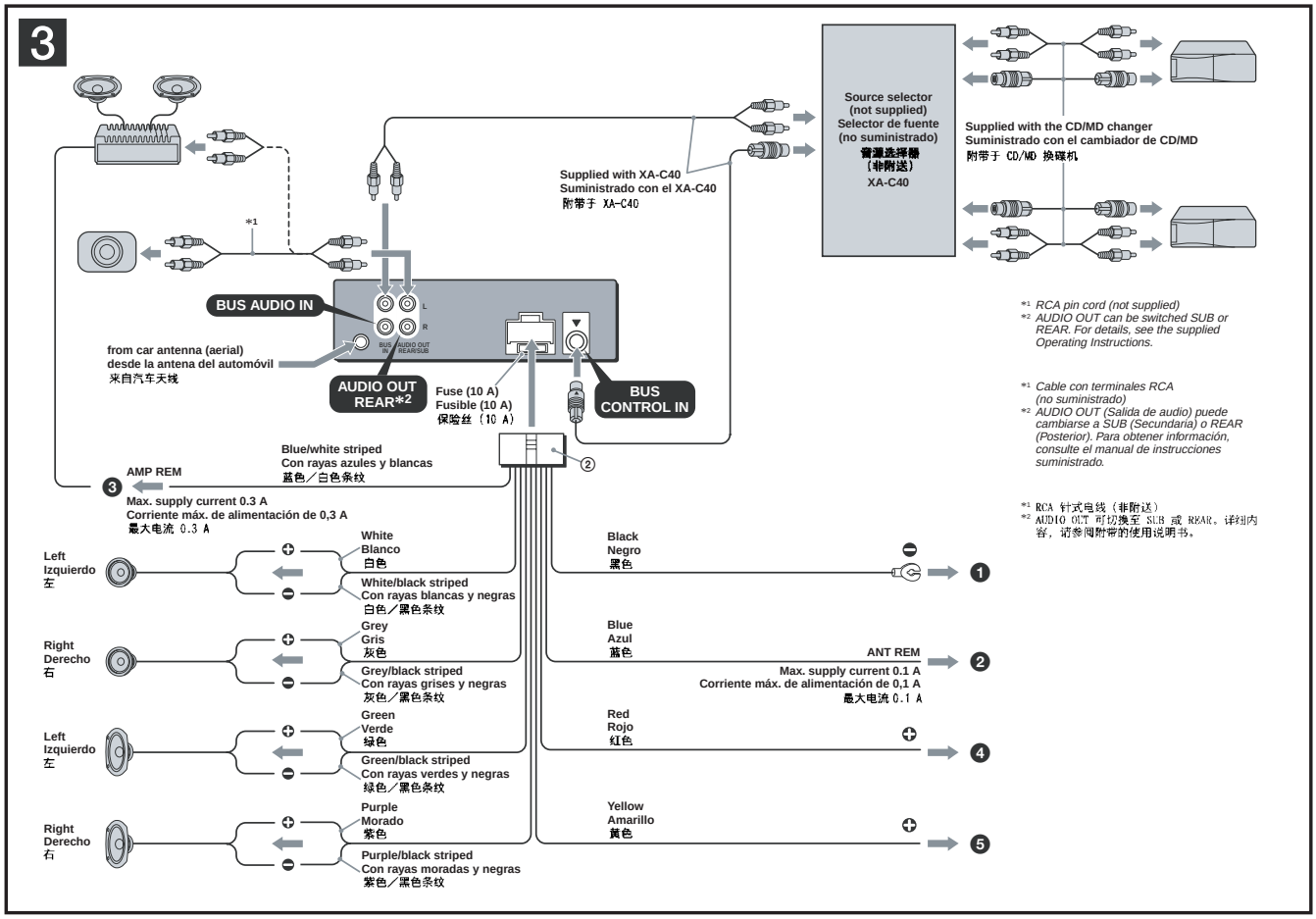

Connection diagram 3

❶ **To a metal surface of the car**
First connect the black ground (earth) lead, then connect the yellow and red power supply leads.

❷ **To the power antenna (aerial) control lead or power supply lead of antenna (aerial) booster**
Notes
- *It is not necessary to connect this lead if there is no power antenna (aerial) or antenna (aerial) booster, or with a manually-operated telescopic antenna (aerial).*
- *When your car has a built-in FM/AM antenna (aerial) in the rear/side glass, see "Notes on the control and power supply leads."*

❸ **To AMP REMOTE IN of an optional power amplifier**
This connection is only for amplifiers. Connecting any other system may damage the unit.

❹ **To the +12 V power terminal which is energized in the accessory position of the ignition switch**
Notes
- *If there is no accessory position, connect to the +12 V power (battery) terminal which is energized at all times. Be sure to connect the black ground (earth) lead to a metal surface of the car first.*
- *When your car has a built-in FM/AM antenna (aerial) in the rear/side glass, see "Notes on the control and power supply leads."*

❺ **To the +12 V power terminal which is energized at all times**
Be sure to connect the black ground (earth) lead to a metal surface of the car first.

Notes on the control and power supply leads
- *The power antenna (aerial) control lead (blue) supplies +12 V DC when you turn on the tuner.*
- *When your car has built-in FM/AM antenna (aerial) in the rear/side glass, connect the power antenna (aerial) control lead (blue) or the accessory power supply lead (red) to the power terminal of the existing antenna (aerial) booster. For details, consult your dealer.*
- *A power antenna (aerial) without a relay box cannot be used with this unit.*

Memory hold connection
When the yellow power supply lead is connected, power will always be supplied to the memory circuit even when the ignition switch is turned off.

Notes on speaker connection
- *Before connecting the speakers, turn the unit off.*
- *Use speakers with an impedance of 4 to 8 ohms, and with adequate power handling capacities to avoid its damage.*
- *Do not connect the speaker terminals to the car chassis, or connect the terminals of the right speakers with those of the left speaker.*
- *Do not connect the ground (earth) lead of this unit to the negative (–) terminal of the speaker.*
- *Do not attempt to connect the speakers in parallel.*
- *Connect only passive speakers. Connecting active speakers (with built-in amplifiers) to the speaker terminals may damage the unit.*
- *To avoid a malfunction, do not use the built-in speaker leads installed in your car if the unit shares a common negative (–) lead for the right and left speakers.*
- *Do not connect the unit's speaker leads to each other.*

Note on connection
If speaker and amplifier are not connected correctly, "FAILURE" appears in the display. In this case, make sure the speaker and amplifier are connected correctly.

Diagrama de conexión 3

❶ **A una superficie metálica del automóvil**
Conecte primero el cable de conexión a masa negro, y después los cables amarillo y rojo de fuente de alimentación.

❷ **Al cable de control de la antena motorizada o al cable de fuente de alimentación del amplificador de señal de la antena**
Notas
- *Si no se dispone de antena motorizada ni de amplificador de antena, o se utiliza una antena telescópica accionada manualmente, no será necesario conectar este cable.*
- *Si el automóvil incorpora una antena de FM/AM en el cristal trasero o lateral, consulte "Notas sobre los cables de control y de fuente de alimentación".*

❸ **A AMP REMOTE IN de un amplificador de potencia opcional**
Esta conexión es sólo para amplificadores. La conexión de cualquier otro sistema puede dañar la unidad.

❹ **Al terminal de alimentación de +12 V que recibe energía en la posición de accesorio del interruptor de encendido**
Notas
- *Si no hay posición de accesorio, conéctelo al terminal de alimentación (batería) de +12 V que recibe energía sin interrupción.*
  Asegúrese de conectar primero el cable de conexión a masa negro a una superficie metálica del automóvil.
- *Si el automóvil incorpora una antena de FM/AM en el cristal trasero o lateral, consulte "Notas sobre los cables de control y de fuente de alimentación".*

❺ **Al terminal de alimentación de +12 V que recibe energía sin interrupción**
Asegúrese de conectar primero el cable de conexión a masa negro a una superficie metálica del automóvil.

Notas sobre los cables de control y de fuente de alimentación
- *El cable de control de la antena motorizada (azul) suministrará cc de + 12 V cuando conecte la alimentación del sintonizador.*
- *Si el automóvil dispone de una antena de FM/AM incorporada en el cristal trasero o lateral, conecte el cable de control de antena motorizada (azul) o el cable de fuente de alimentación auxiliar (rojo) al terminal de alimentación del amplificador de antena existente. Para obtener más información, consulte a su distribuidor.*
- *Con esta unidad no es posible utilizar una antena motorizada sin caja de relé.*

Conexión para protección de la memoria
Si conecta el cable de fuente de alimentación amarillo, el circuito de la memoria recibirá siempre alimentación, aunque apague el interruptor de encendido.

Notas sobre la conexión de los altavoces
- *Antes de conectar los altavoces, desconecte la alimentación de la unidad.*
- *Utilice altavoces con una impedancia de 4 a 8 Ω con la capacidad de potencia adecuada para evitar que se dañen.*
- *No conecte los terminales de altavoz al chasis del automóvil, ni conecte los terminales del altavoz derecho con los del izquierdo.*
- *No conecte el cable de conexión a masa de esta unidad al terminal negativo (–) del altavoz.*
- *No intente conectar los altavoces en paralelo.*
- *Conecte solamente altavoces pasivos. Si conecta altavoces activos (con amplificadores incorporados) a los terminales de altavoz, puede dañar la unidad.*
- *Para evitar fallas de funcionamiento, no utilice los cables de altavoz incorporados instalados en el automóvil si la unidad comparte un cable negativo común (–) para los altavoces derecho e izquierdo.*
- *No conecte los cables de altavoz de la unidad entre sí.*

Nota sobre la conexión
Si el altavoz no está conectado correctamente, aparecerá "FAILURE" en la pantalla. Si es así, compruebe la conexión del altavoz.

线路连接图 3

❶ **至汽车金属表面**
首先连接黑色地线，然后连接黄色和红色电源导线。

❷ **至电动天线控制导线或天线升缩器的电源导线**
注
- 如果没有电动天线或天线升缩器，或有手动伸缩式天线，则无需连接此导线。
- 若汽车的后/侧玻璃内有内置 FM/AM 天线，请参阅“关于控制导线和电源导线的注意事项”。

❸ **至选购的功率放大器的 AMP REMOTE IN**
此连接仅适用于功率放大器。连接其它系统可能损坏本机。

❹ **至 +12 V 电源端子，该端子在点火开关附件位置通电**
注
- 如果没有附件位置，则连接至 +12 V 电源（蓄电池）端子，该端子随时处于通电状态。
  确保首先将黑色地线连接至汽车金属表面。
- 若汽车的后/侧玻璃内有内置 FM/AM 天线，请参阅“关于控制导线和电源导线的注意事项”。

❺ **至 +12 V 电源端子，该端子随时处于通电状态**
确保首先将黑色地线连接至汽车金属表面。

关于控制导线和电源导线的注意事项
- 接通调谐器电源时，电动天线的控制导线（蓝色）便能提供 +12 V 直流电。
- 当汽车的后/侧玻璃窗上有内置 FM/AM 天线时，请将电动天线控制线（蓝色）或辅助电源导线（红色）连接至现有天线升缩器上的电源端子上。详细说明，请与您的经销商联系。
- 本机不能使用不具备继电器盒的电动天线。

保持记忆的线路连接法
当连接了黄色的电源导线时，即使点火开关关闭，电源仍将对记忆电路供电。

关于扬声器连接的注意事项
- 连接扬声器之前，请关闭本机电源。
- 请使用阻抗为 4-8 欧姆且具有足够功率处理能力的扬声器，以免损坏。
- 勿将扬声器端子连接到汽车底盘上，或将右扬声器的端子与左扬声器的端子连接。
- 勿将本机的地线连接到扬声器的负极（-）端子上。
- 扬声器不可并联连接。
- 请仅连接无源扬声器。将有源扬声器（具有内置放大器）连接到扬声器端子可能会损坏本机。
- 若本机使用左、右扬声器的共用负极（-）导线，为了避免故障，切勿使用安装在汽车内的内置扬声器导线。
- 请勿将本机扬声器导线相互连接。

连接的注意事项
如果未正确连接扬声器和放大器，则显示屏上会出现“FAILURE”。这时，请确保扬声器和放大器连接正确。

SECTION 2
DISASSEMBLY

Note: This set can be disassemble according to the following sequence.

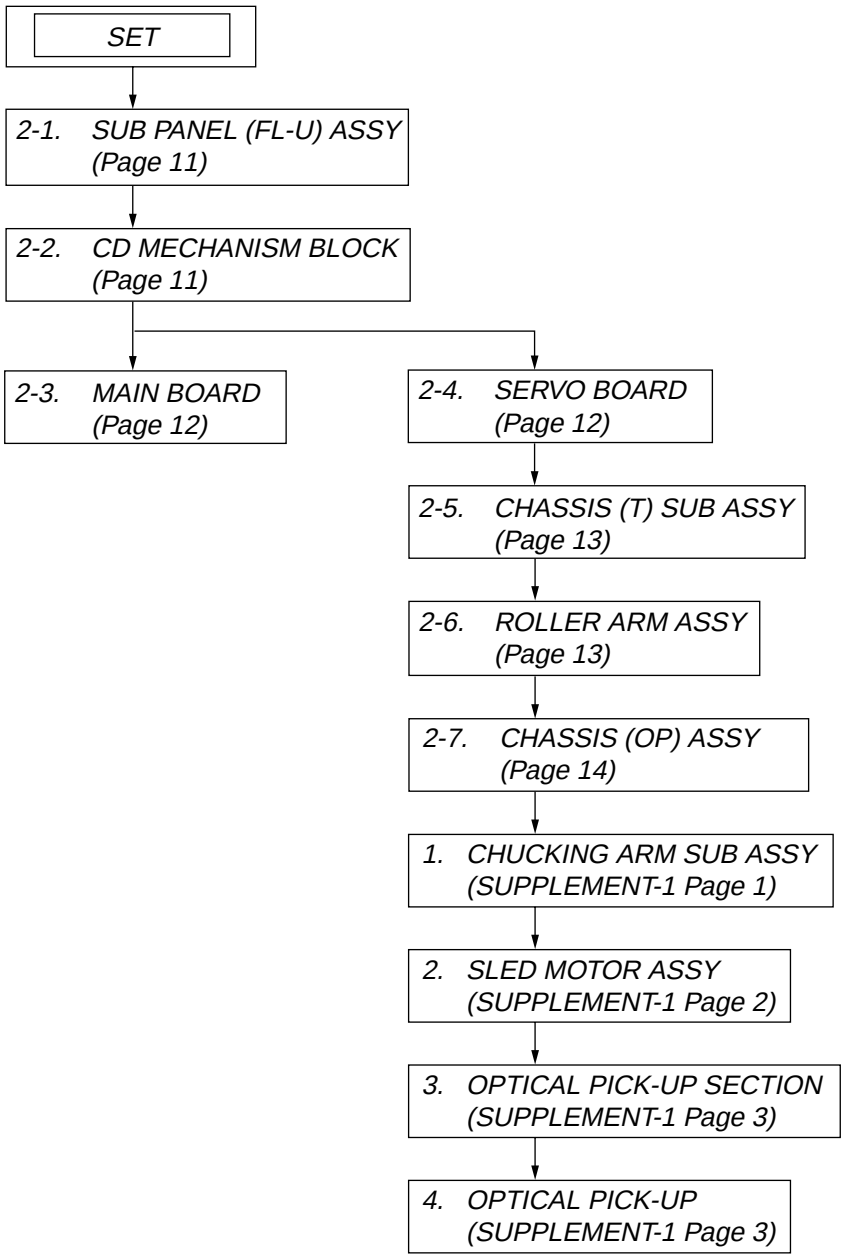

Note: Follow the disassembly procedure in the numerical order given.

2-1. SUB PANEL (FL) ASSY

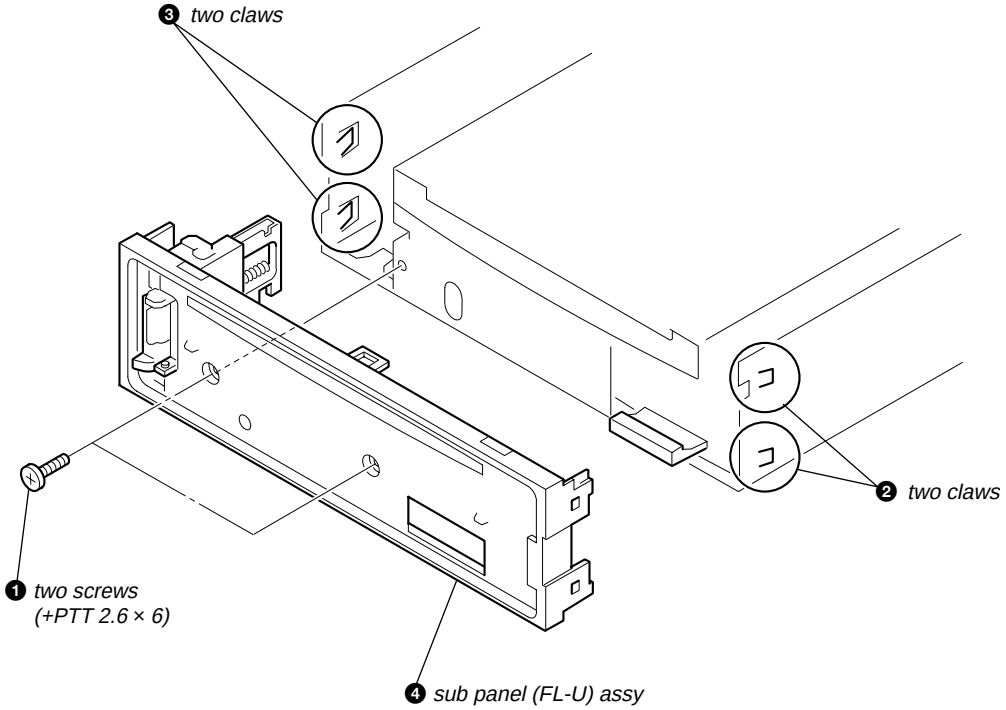

2-2. CD MECHANISM BLOCK

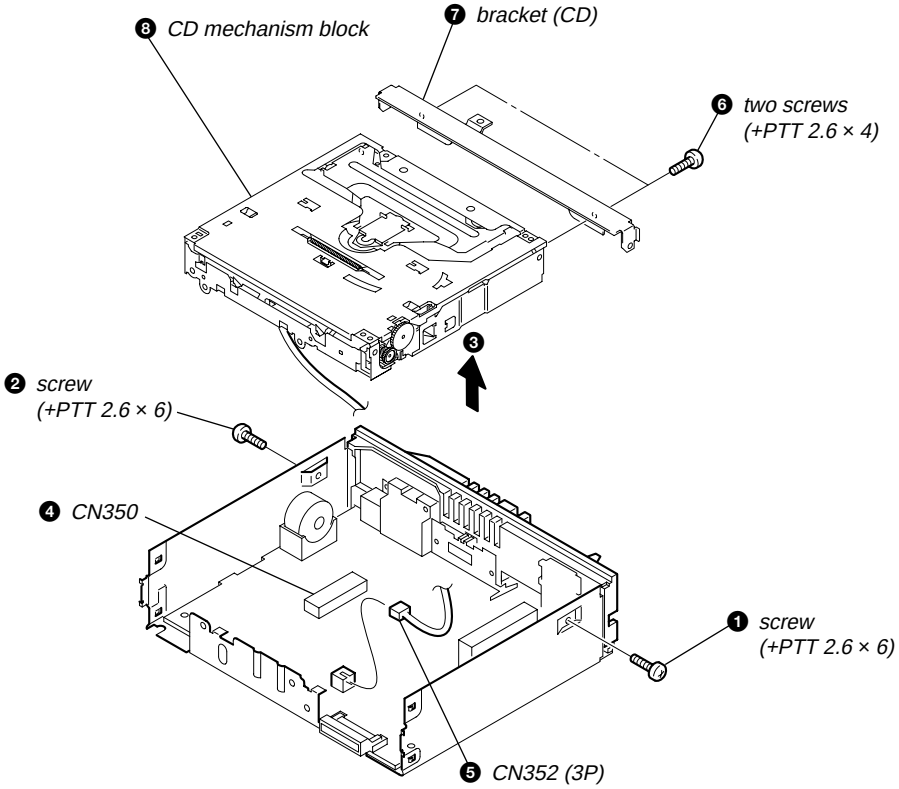

2-3. MAIN BOARD

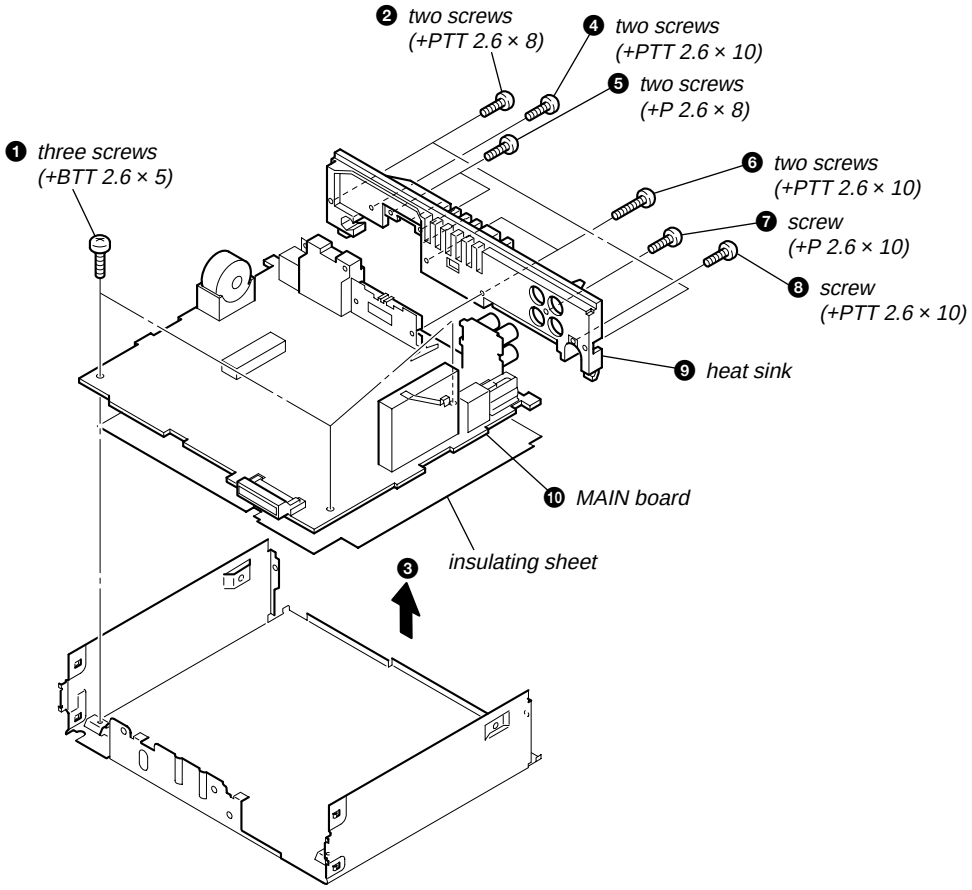

2-4. SERVO BOARD

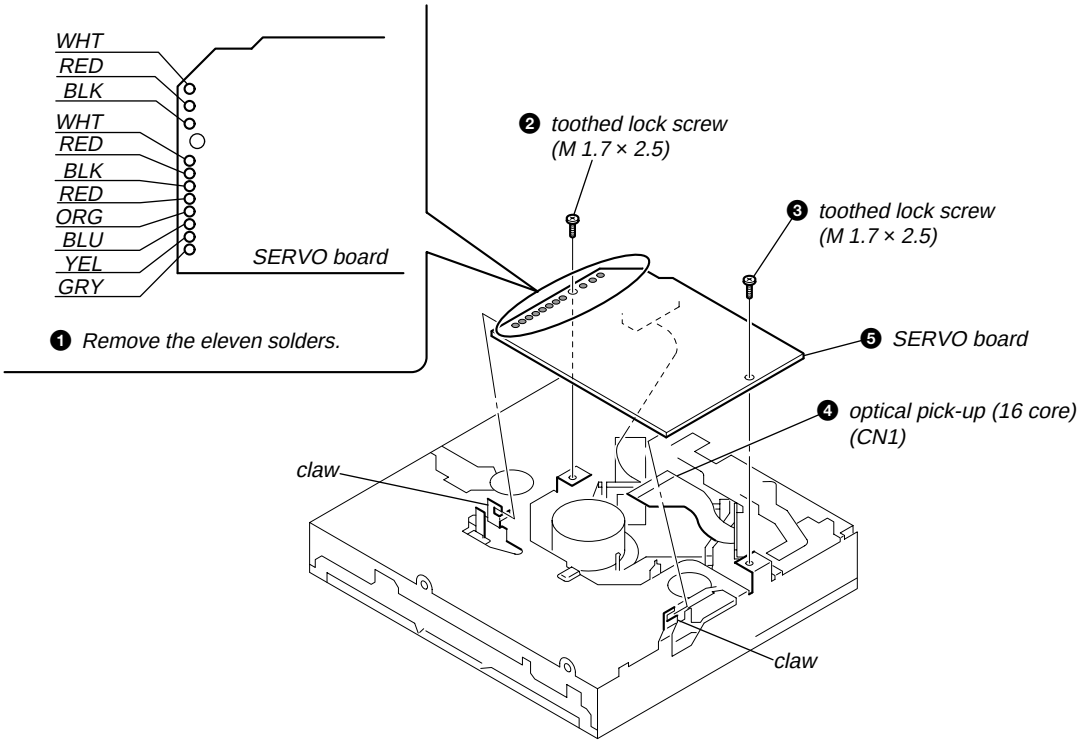

2-5. CHASSIS (T) SUB ASSY

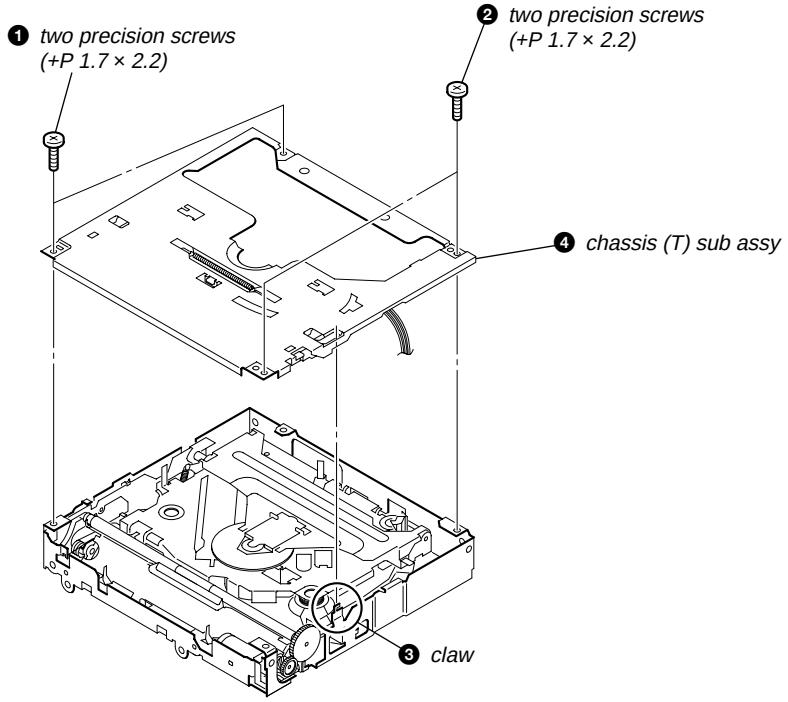

2-6. ROLLER ARM ASSY

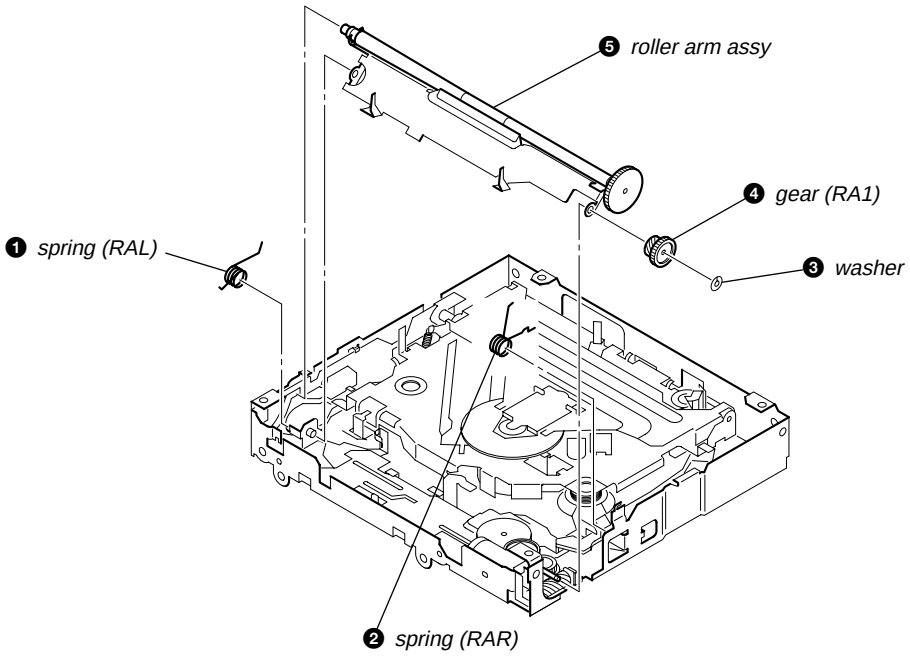

2-7. CHASSIS (OP) ASSY

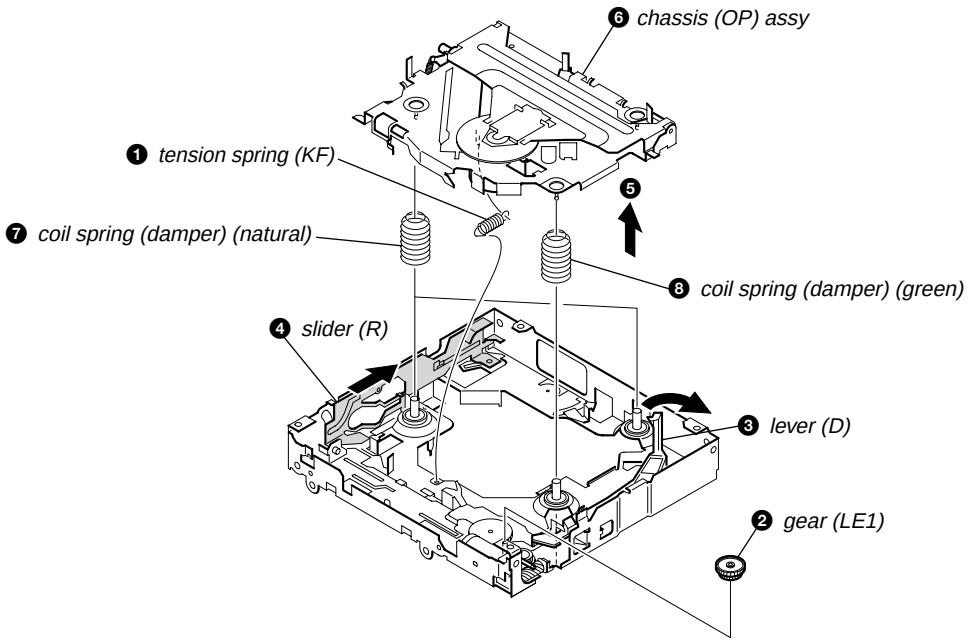

SECTION 3
DIAGNOSIS FUNCTION

Description of the Diagnostics function:

1. Setting the Diag display mode

With the power off, press the 4 button, 5 button, and 4 button on the set body or the remote control (for more than 2 seconds) in turn.

2. Canceling the Diag display mode

During the Diag function mode, press the OFF button.

3. Initial display in the Diag display mode.

Just when the Diag mode is entered, “reset count” is displayed. The display mode is switched by each rotation of SEEK +/▶▶ ▶▶I or SEEK – /I◀◀ ◀◀ keys.

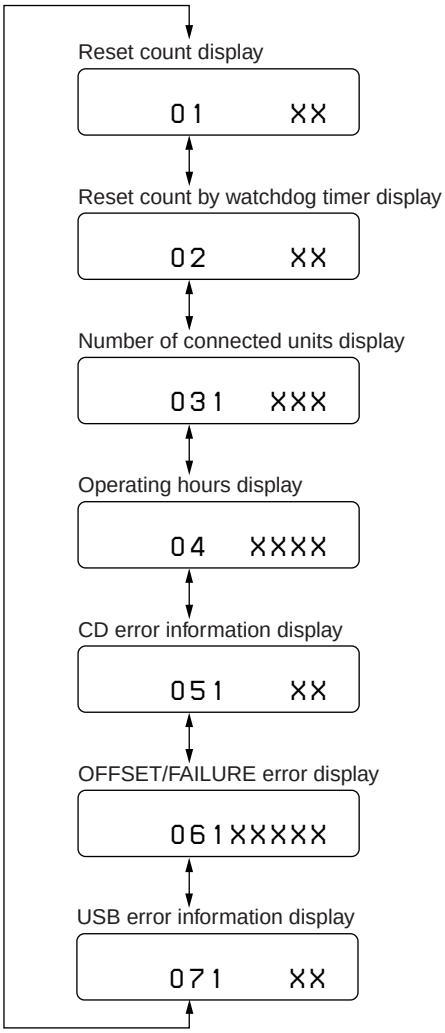

4. Contents of each display mode

4-1. Reset count display mode

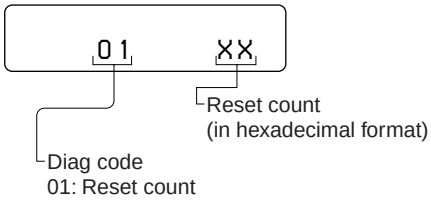

4-2. Reset count by watchdog timer display mode

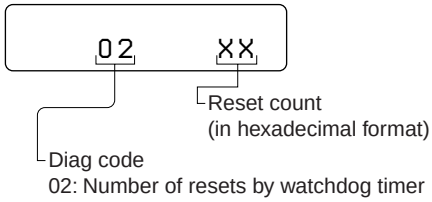

4-3. Number of connected units display mode

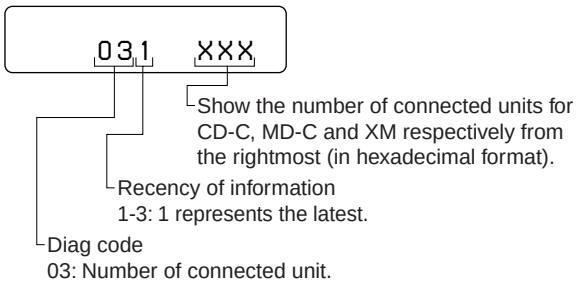

The display mode is switched by each rotation of 2/GP/ALBM+ or 1/GP/ALBM– keys during the number of connected units display mode.

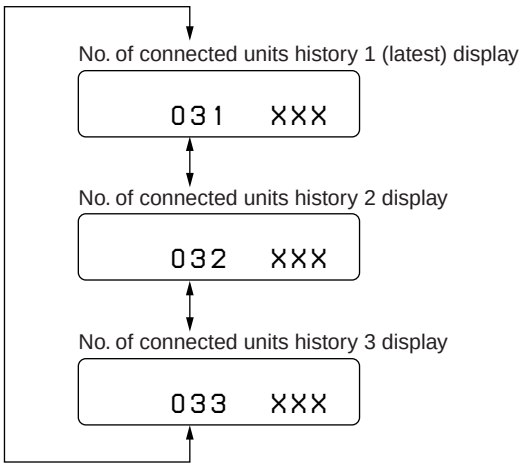

4-4. Operating hours display mode

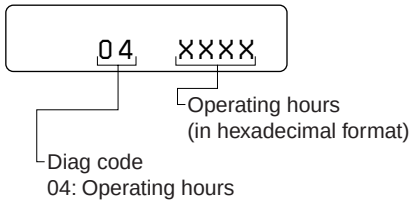

4-5. CD error information display mode
4-5-1. Error description

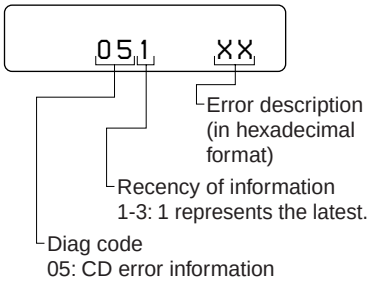

Error information

Indication	Description
1X	SERVO ERROR
3X	LOADING ERROR
4X	TRACK JUMP
5X	TEXT ERROR
FX	MECHA ERROR

4-5-2. Disc type and operating hours

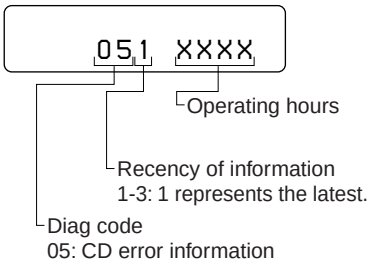

Disc type

Indication	Disc type
0	MP3
1	WMA
2	AAC
3	ATRAC
8	CD/DA
F	UNKNOWN

The display mode is switched by each rotation of 2/GP/ALBM+ or 1/GP/ALBM– keys during the CD error information display mode.

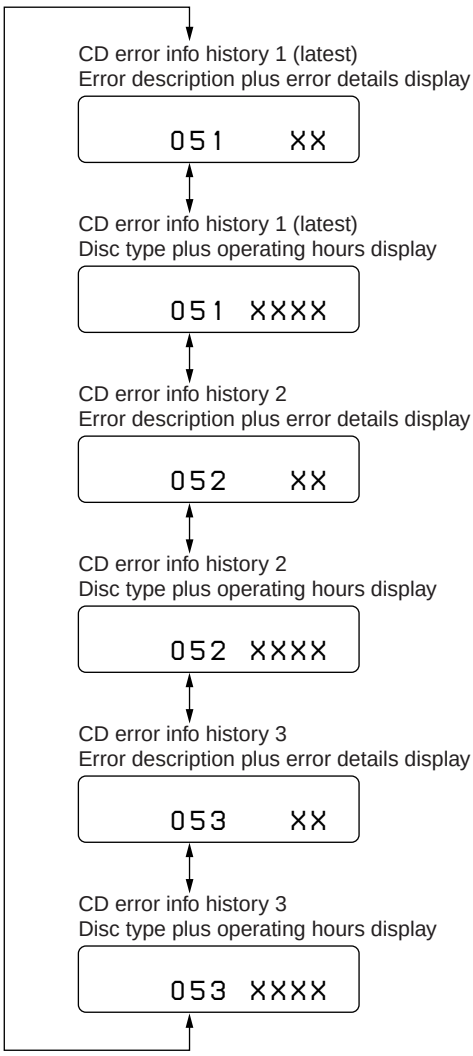

4-6. OFFSET/FAILURE error display mode

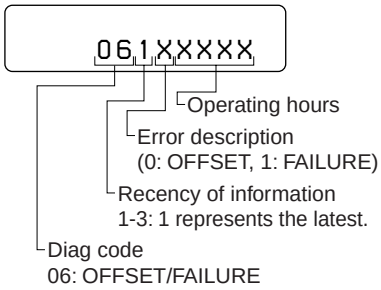

The display mode is switched by each rotation of 2/GP/ALBM+ or 1/GP/ALBM– keys during the OFFSET/FAILURE error display mode.

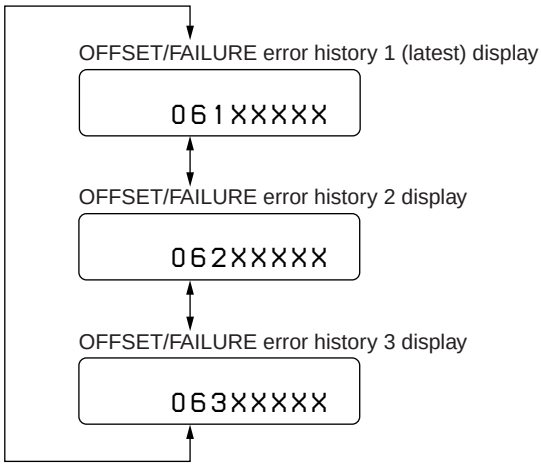

4-7. USB error information display mode
4-7-1. Error description

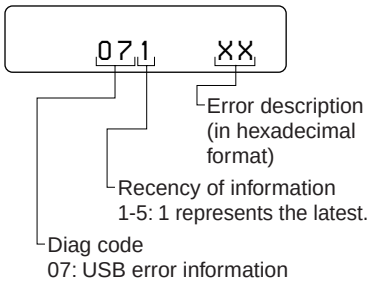

Error information

Indication	Description
15	DEVICE ERROR
17	FILE ERROR (NO MUSIC)
1E	POWER ON ERROR
1F	BOOT ERROR
3A	INVALID EJECT ERROR
43	READ ERROR
44	INVALID FORMAT FILE
FA	NOT SUPPORT DEVICE
FB	HUB NOT SUPPORT

4-7-2. Disc type and operating hours

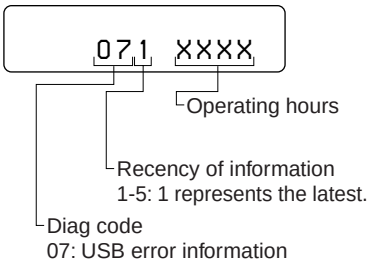

The display mode is switched by each rotation of 2/GP/ALBM+ or 1/GP/ALBM– keys during the CD error information display mode.

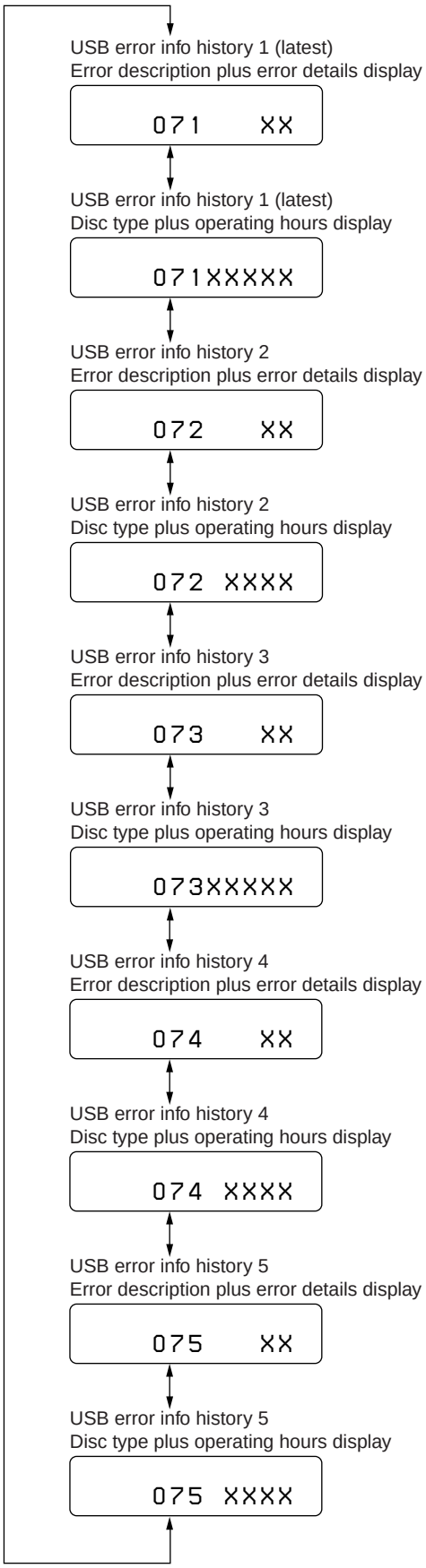

MEMO

SECTION 4
DIAGRAMS

4-1. BLOCK DIAGRAM — MAIN SECTION —

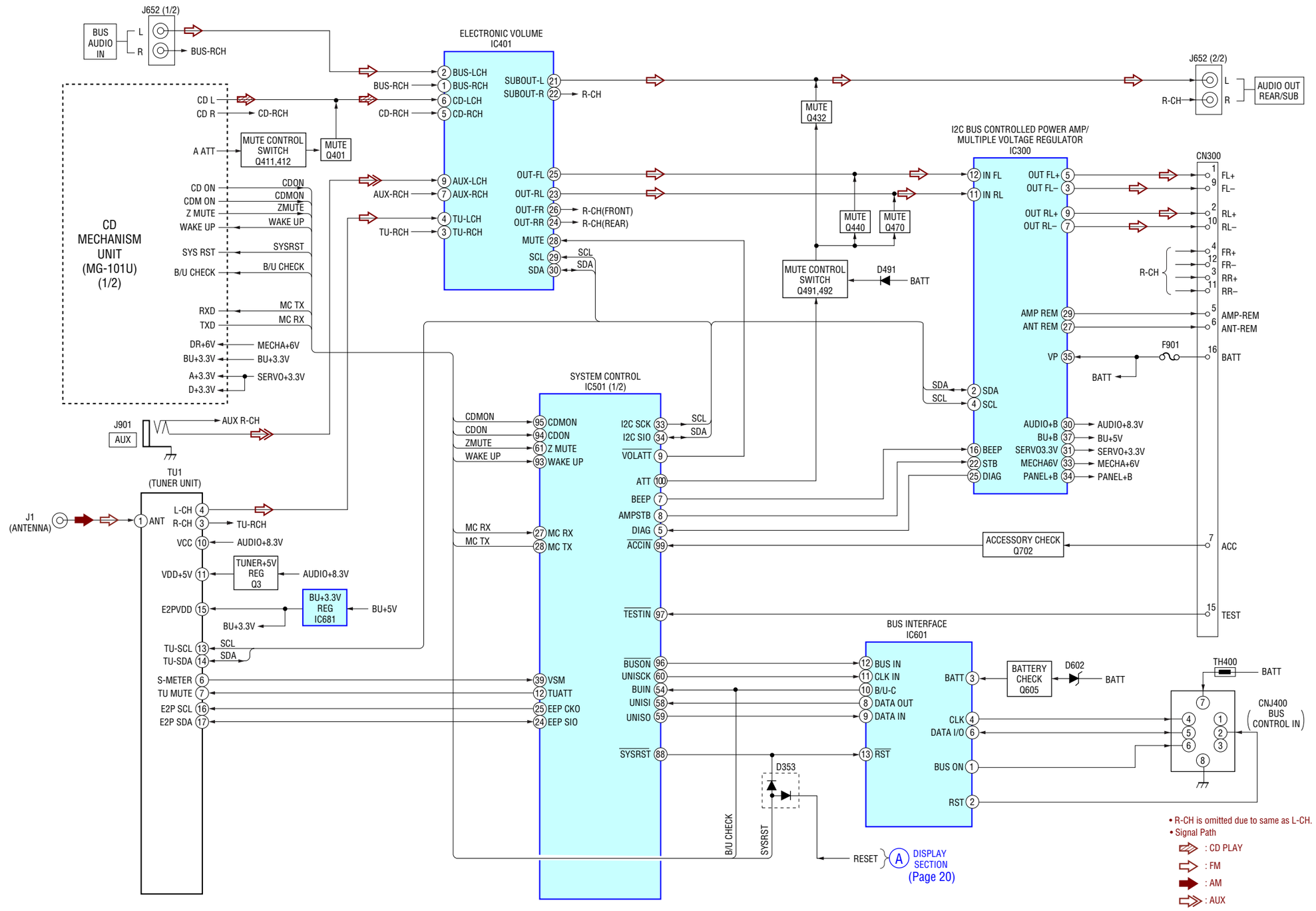

4-2. BLOCK DIAGRAM — DISPLAY SECTION —

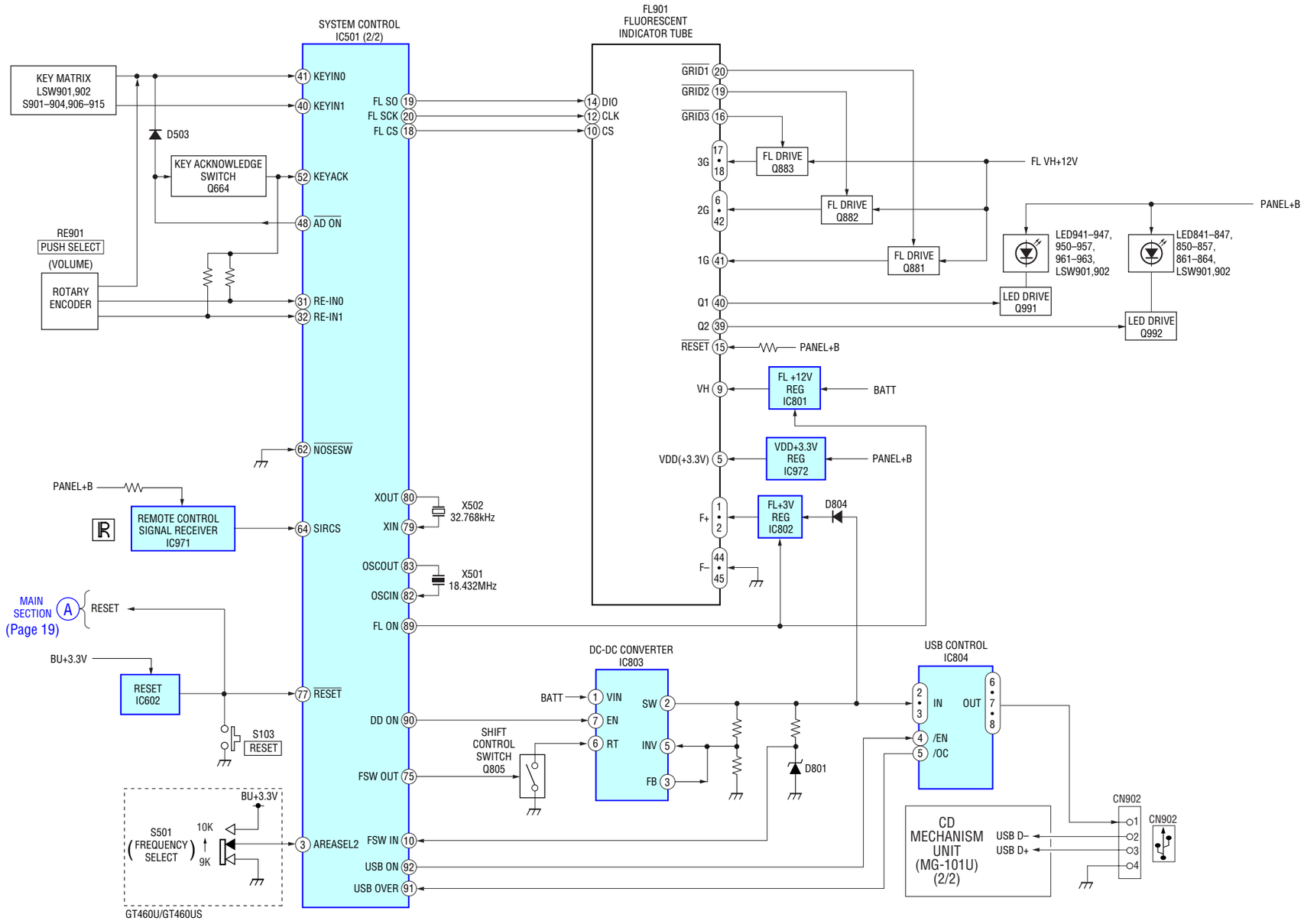

• NOTE FOR PRINTED WIRING BOARDS AND SCHEMATIC DIAGRAMS

THIS NOTE IS COMMON FOR PRINTED WIRING BOARDS AND SCHEMATIC DIAGRAMS.
(In addition to this, the necessary note is printed in each block.)

For schematic diagrams.

Note:
- All capacitors are in µF unless otherwise noted. (p: pF) 50 WV or less are not indicated except for electrolytics and tantalums.
- All resistors are in Ω and 1/4 W or less unless otherwise specified.
- △ : internal component.
- ▭ : panel designation.

Note:	**Note:**
The components identified by mark ⚠ or dotted line with mark ⚠ are critical for safety. Replace only with part number specified.	Les composants identifiés par une marque ⚠ sont critiques pour la sécurité. Ne les remplacer que par une piéce portant le numéro spécifié.

- ▬ : B+ Line.
- ▬ ▬ ▬ : B– Line.
- ▭ : adjustment for repair.
- Voltages and waveforms are dc with respect to ground under no-signal (detuned) conditions.
  no mark : FM
  ( ) : AM
  < > : CD PLAY
  ∗ : Impossible to measure
- Voltages are taken with a VOM (Input impedance 10 MΩ). Voltage variations may be noted due to normal production tolerances.
- Waveforms are taken with a oscilloscope. Voltage variations may be noted due to normal production tolerances.
- Circled numbers refer to waveforms.
- Signal path.
  ⇨ : CD PLAY
  ⇨ : FM
  ➡ : AM
  ⇨ : AUX

For printed wiring boards.

Note:
- ○——— : parts extracted from the component side.
- ——— : parts extracted from the conductor side.
- ○ : Through hole.
- ▭ : Pattern from the side which enables seeing.

(The other layers' patterns are not indicated.)

Caution:	
Pattern face side: (Side B)	Parts on the pattern face side seen from the pattern face are indicated.
Parts face side: (Side A)	Parts on the parts face side seen from the parts face are indicated.

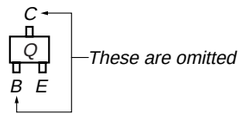

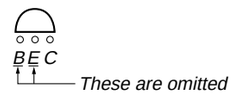

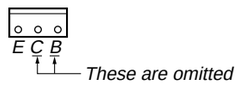

• Waveforms

— MAIN Board —

① IC501 ⑧⓪ (XOUT)

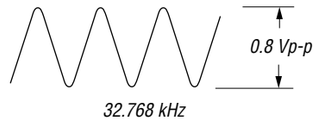

0.2 V/DIV, 20 µsec/DIV

② IC501 ⑧② (OSC IN)

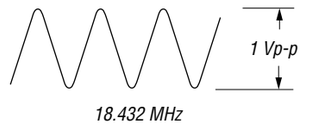

0.5 V/DIV, 0.1 µsec/DIV

4-3. PRINTED WIRING BOARD — MAIN SECTION — : Uses unleaded solder.

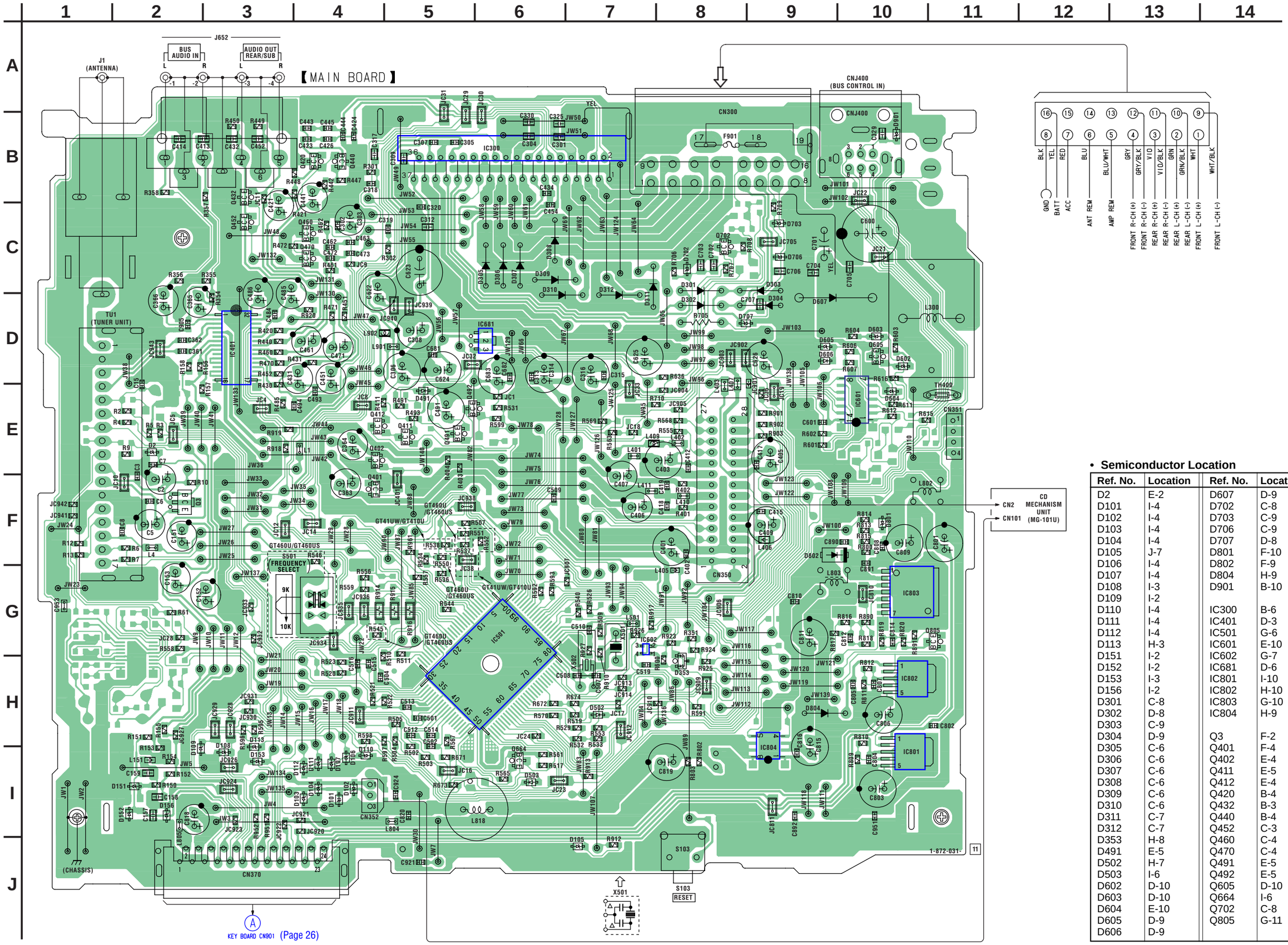

- **Semiconductor Location**

Ref. No.	Location	Ref. No.	Location
D2	E-2	D607	D-9
D101	I-4	D702	C-8
D102	I-4	D703	C-9
D103	I-4	D706	C-9
D104	I-4	D707	D-8
D105	J-7	D801	F-10
D106	I-4	D802	F-9
D107	I-4	D804	H-9
D108	I-3	D901	B-10
D109	I-2		
D110	I-4	IC300	B-6
D111	I-4	IC401	D-3
D112	I-4	IC501	G-6
D113	H-3	IC601	E-10
D151	I-2	IC602	G-7
D152	I-2	IC681	D-6
D153	I-3	IC801	I-10
D156	I-2	IC802	H-10
D301	C-8	IC803	G-10
D302	D-8	IC804	H-9
D303	C-9		
D304	D-9	Q3	F-2
D305	C-6	Q401	F-4
D306	C-6	Q402	E-4
D307	C-6	Q411	E-5
D308	C-6	Q412	E-4
D309	C-6	Q420	B-4
D310	C-6	Q432	B-3
D311	C-7	Q440	B-4
D312	C-7	Q452	C-3
D353	H-8	Q460	C-4
D491	E-5	Q470	C-4
D502	H-7	Q491	E-5
D503	I-6	Q492	E-5
D602	D-10	Q605	D-10
D603	D-10	Q664	I-6
D604	E-10	Q702	C-8
D605	D-9	Q805	G-11
D606	D-9		

4-4. SCHEMATIC DIAGRAM — MAIN SECTION (1/3) — • Refer to page 28 for IC Block Diagrams.

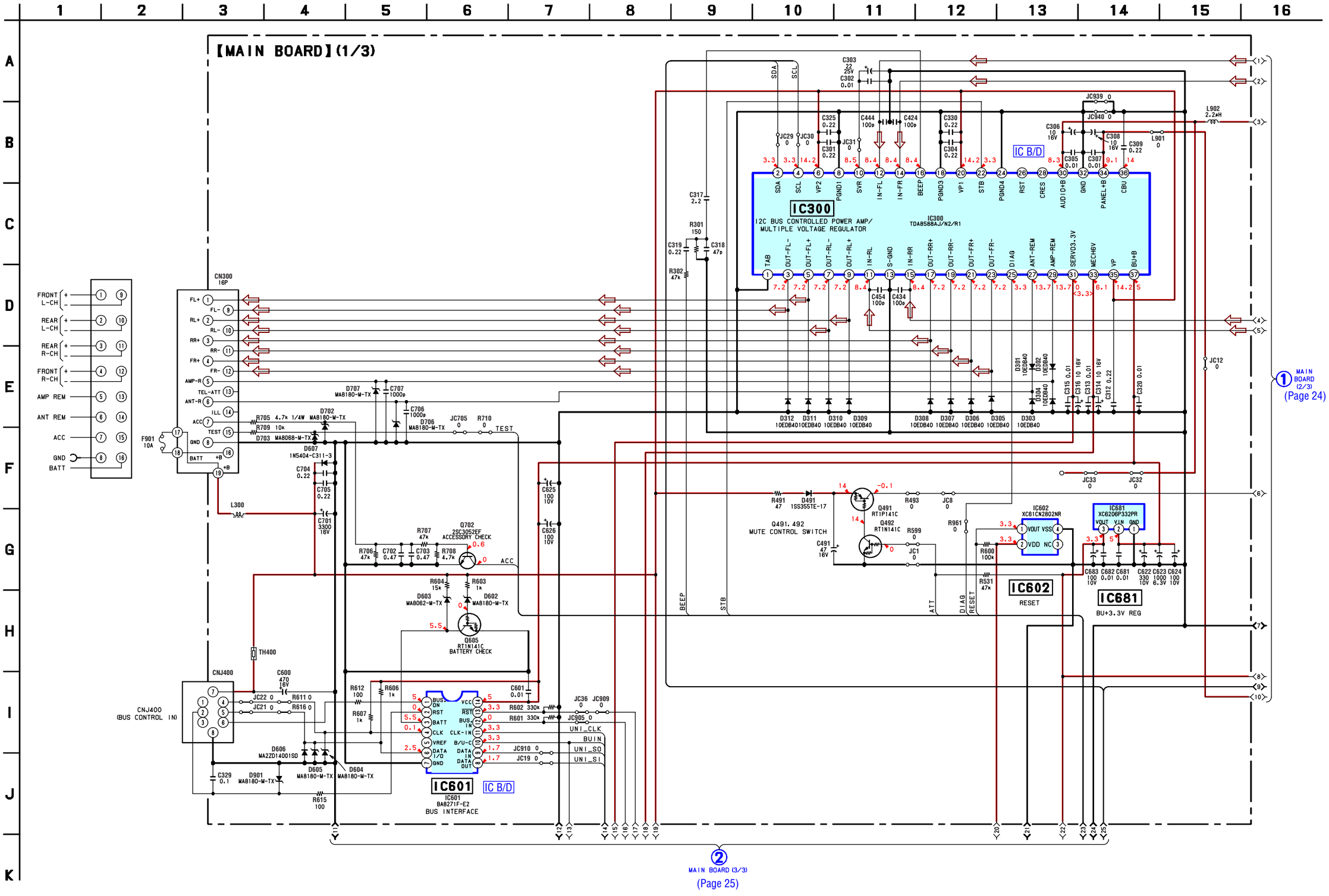

4-5. SCHEMATIC DIAGRAM — MAIN SECTION (2/3) — • Refer to page 28 for IC Block Diagrams.

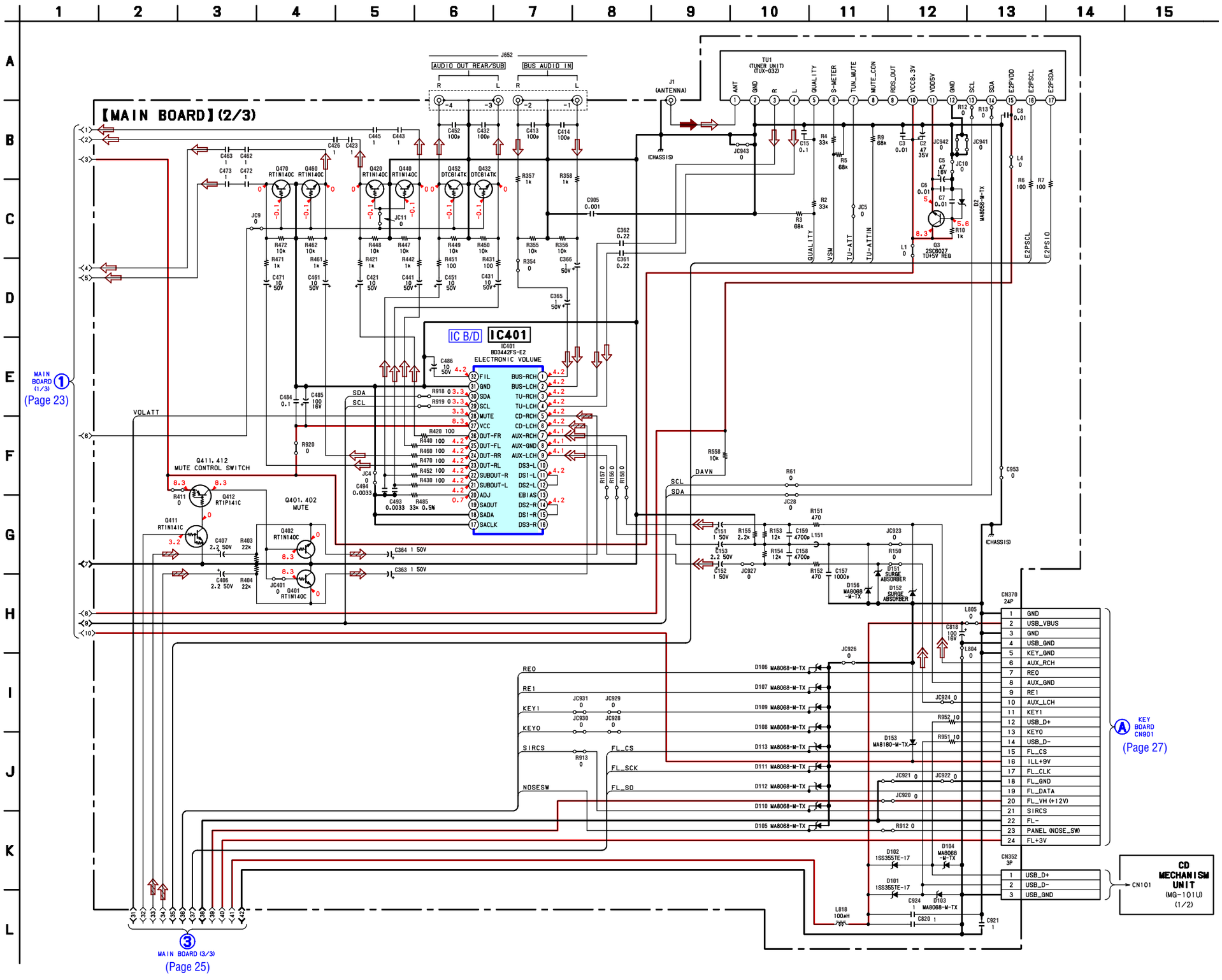

4-6. SCHEMATIC DIAGRAM — MAIN SECTION (3/3) —

- Refer to page 21 for Waveforms.
- Refer to page 29 for IC Block Diagrams.
- Refer to page 30 for IC Pin Description of IC501.

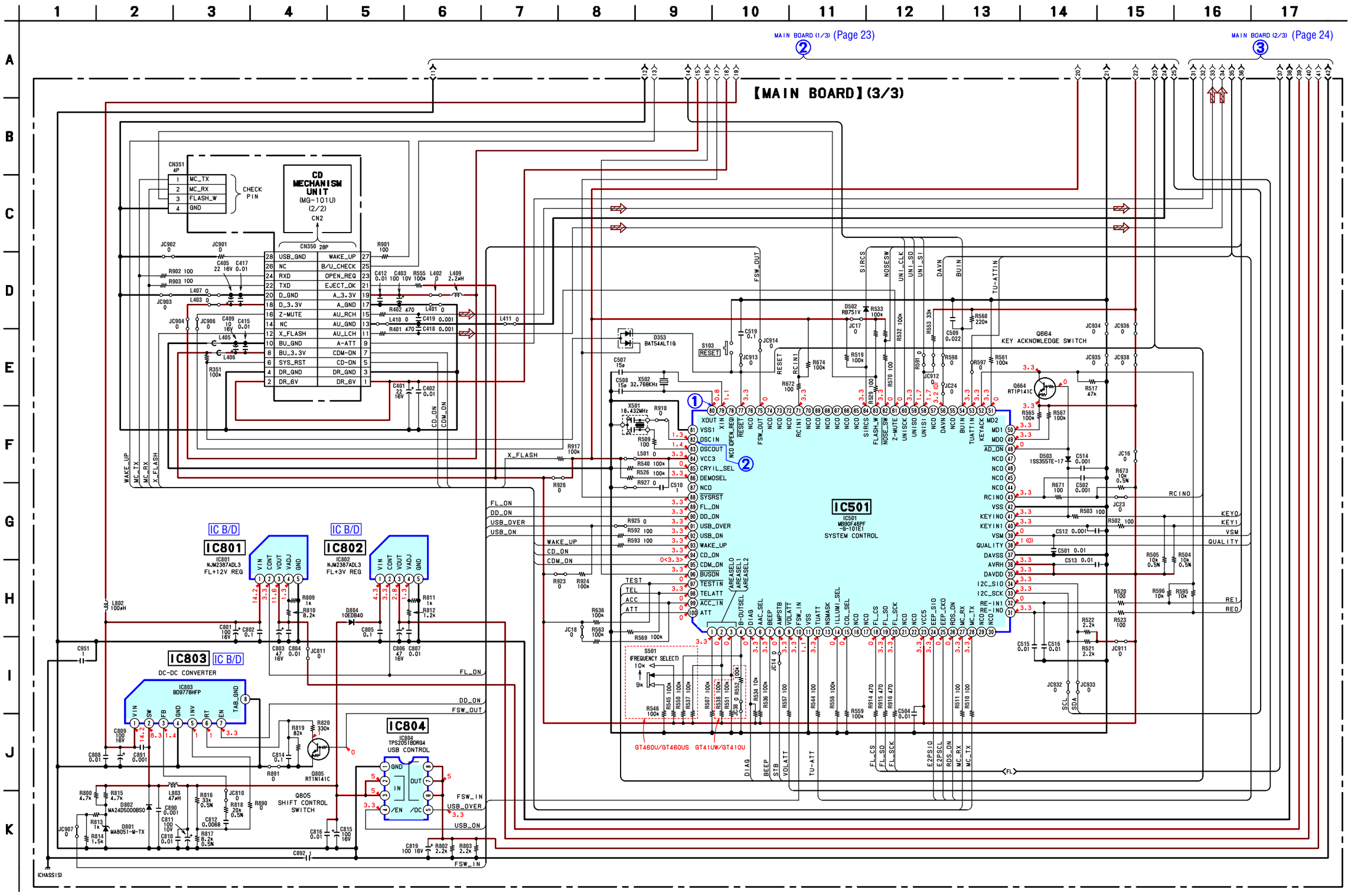

4-7. PRINTED WIRING BOARD — KEY SECTION — : Uses unleaded solder.

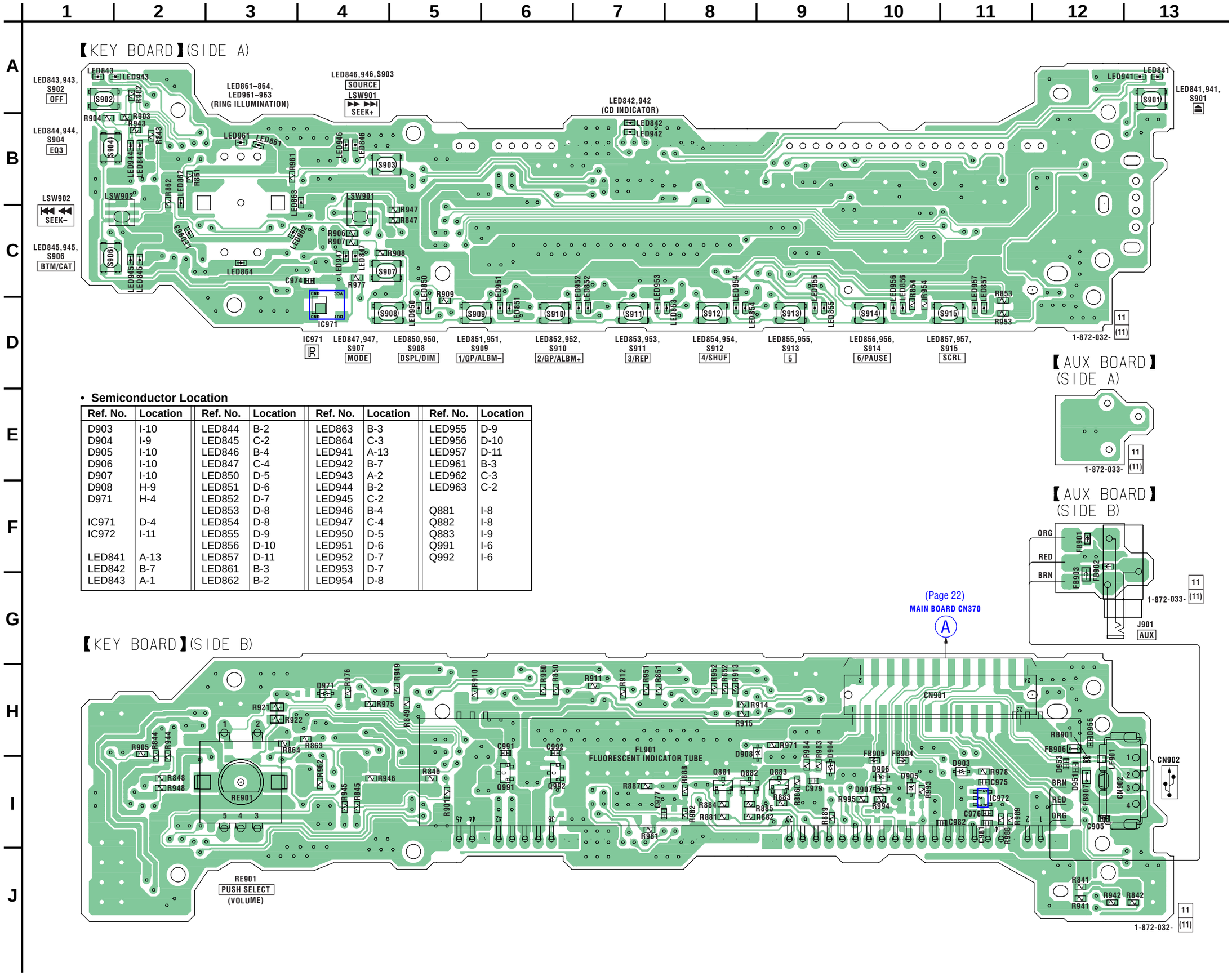

- **Semiconductor Location**

Ref. No.	Location	Ref. No.	Location	Ref. No.	Location	Ref. No.	Location
D903	I-10	LED844	B-2	LED863	B-3	LED955	D-9
D904	I-9	LED845	C-2	LED864	C-3	LED956	D-10
D905	I-10	LED846	B-4	LED941	A-13	LED957	D-11
D906	I-10	LED847	C-4	LED942	B-7	LED961	B-3
D907	I-10	LED850	D-5	LED943	A-2	LED962	C-3
D908	H-9	LED851	D-6	LED944	B-2	LED963	C-2
D971	H-4	LED852	D-7	LED945	C-2		
		LED853	D-8	LED946	B-4	Q881	I-8
IC971	D-4	LED854	D-8	LED947	C-4	Q882	I-8
IC972	I-11	LED855	D-9	LED950	D-5	Q883	I-9
		LED856	D-10	LED951	D-6	Q991	I-6
LED841	A-13	LED857	D-11	LED952	D-7	Q992	I-6
LED842	B-7	LED861	B-3	LED953	D-7		
LED843	A-1	LED862	B-2	LED954	D-8		

4-8. SCHEMATIC DIAGRAM — KEY SECTION —

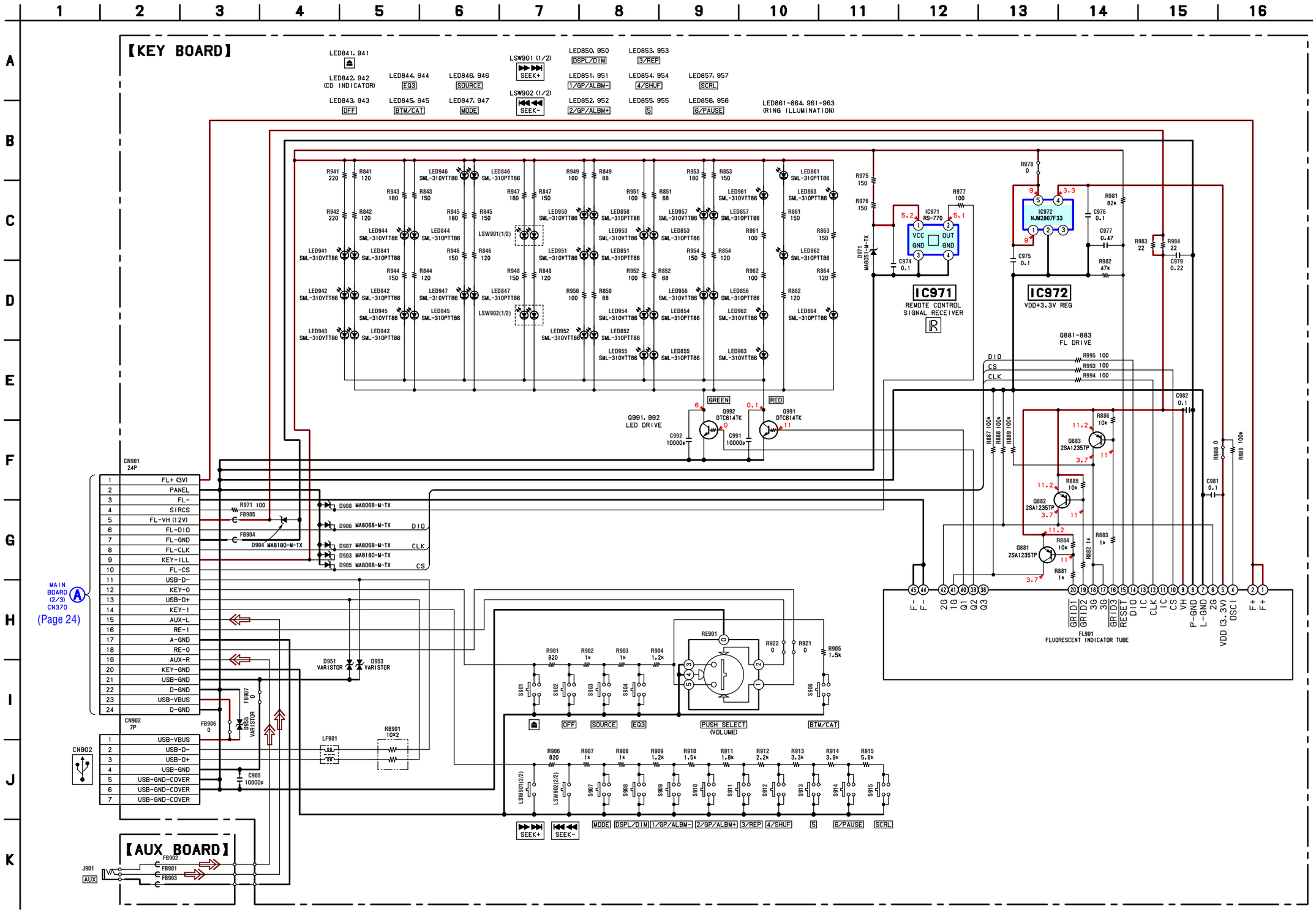

• **IC BLOCK DIAGRAMS**

IC300 TDA8588AJ/N2/R1 (MAIN Board (1/3))

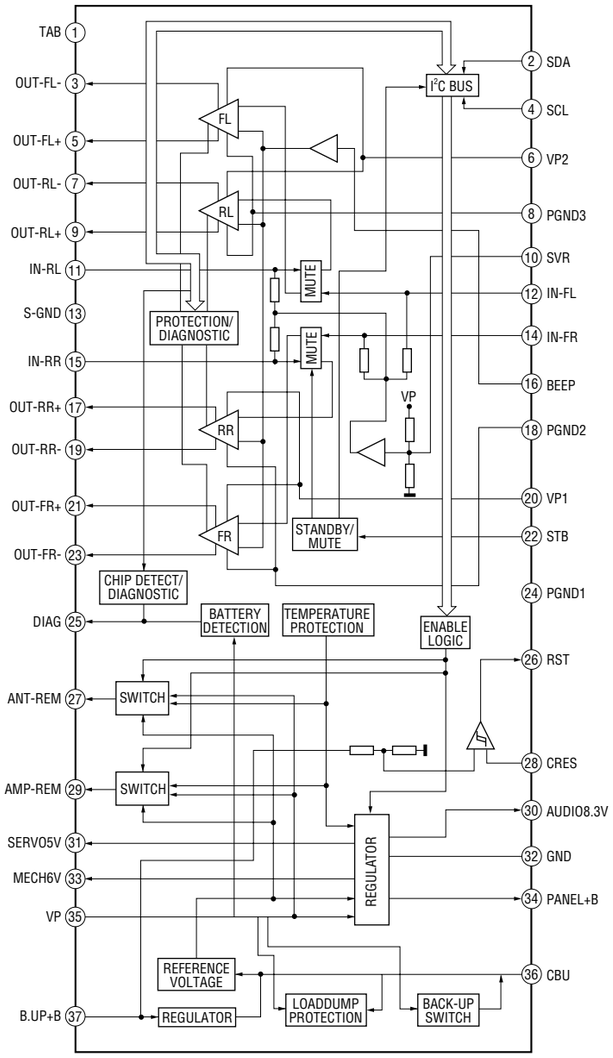

IC601 BA8271F-E2 (MAIN Board (1/3))

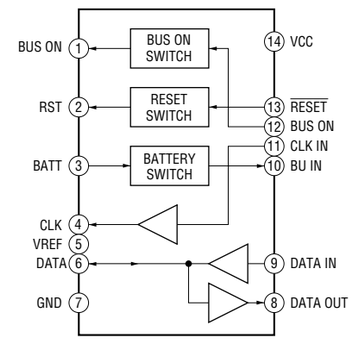

IC401 BD3442FS-E2 (MAIN Board (2/3))

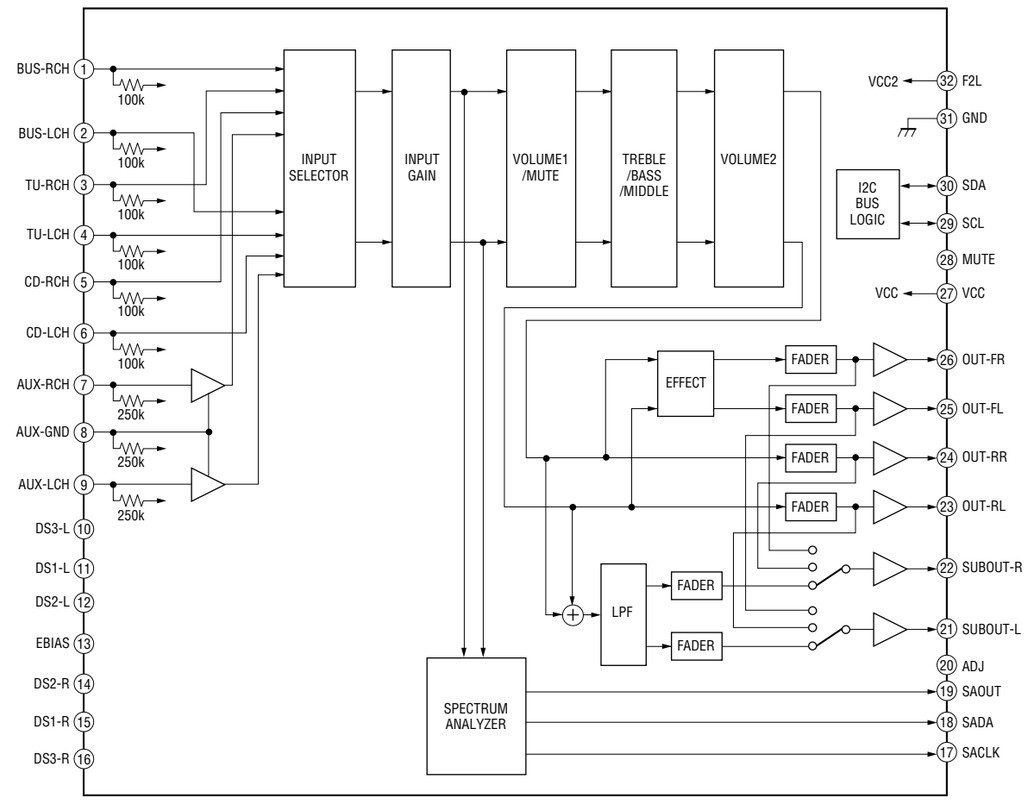

IC801 NJM2387ADL3 (MAIN Board (3/3))
IC802 NJM2387ADL3 (MAIN Board (3/3))

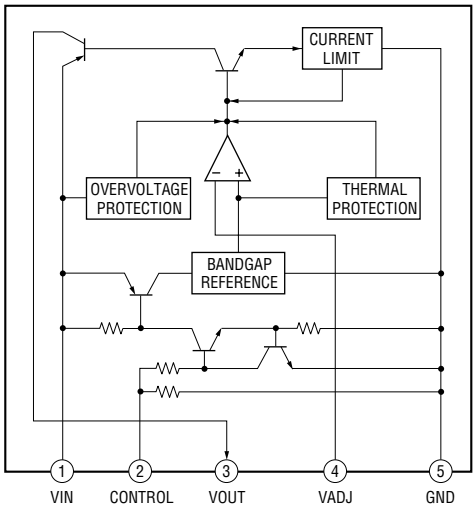

IC803 BD9778HFP (MAIN Board (3/3))

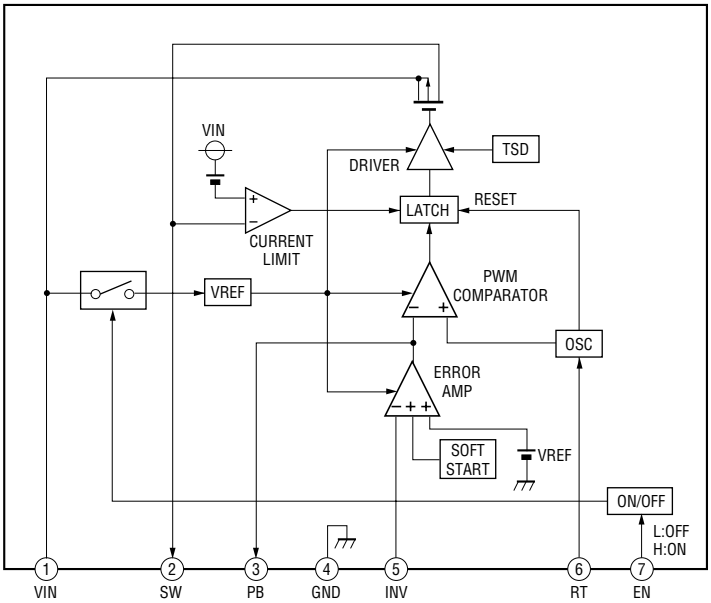

• IC PIN DESCRIPTION

IC501 MB90F046PF-G-101E1 (SYSTEM CONTROL) (MAIN BOARD (3/3))

Pin No.	Pin Name	I/O	Pin Description
1	AREASEL0	I	Destination setting pin 0
2	AREASEL1	I	Destination setting pin 1
3	AREASEL2	I	Destination setting pin 2
4	B-OUTSEL	I	Black-out with/without discrimination signal input “H”: Black-out
5	DIAG	I	Status signal input from power amplifier
6	AAC SEL	I	AAC play setting signal input
7	BEEP	O	Beep signal output to power amplifier
8	AMPSTB	O	Standby signal output to power amplifier
9	$\overline{\text{VOLATT}}$	O	Electronic volume attenuate control signal output
10	FSW IN	I	D/D converter oscillator frequency count signal input
11	VSS	—	Ground pin
12	TUATT	O	Tuner mute control signal output
13	NSMASK	O	Noise mask signal output Not used in this set.
14	ILLUMI SEL	I	Illumination voltage setting signal input
15	COL SEL	I	Two colors change setting signal input
16, 17	NCO	O	Not used. (Open)
18	FL CS	O	Fluorescent indicator tube chip select signal output
19	FL SO	O	Fluorescent indicator tube serial data signal output
20	FL SCK	O	Fluorescent indicator tube serial clock signal output
21, 22	NCO	O	Not used. (Open)
23	VCC5	—	Power supply pin (+3.3 V)
24	EEP SIO	I/O	EEPROM bus serial data signal input/output
25	EEP CKO	O	EEPROM bus serial clock signal output
26	RDS ON	O	RDS (Radio Data System) on signal output Tuner on: “L” Not used in this set.
27	MC RX	I	Mechanism microcomputer comunication signal input RX
28	MC TX	O	Mechanism microcomputer comunication signal output TX
29, 30	NCO	O	Not used. (Open)
31	RE IN0	I	Rotary encoder signal input 0
32	RE IN1	I	Rotary encoder signal input 1
33	I2C SCK	O	I2C bus serial clock signal output
34	I2C SIO	I/O	I2C bus serial data signal input/output
35	DAVDD	—	A/D converter power supply pin (+3.3 V)
36	AVRH	—	A/D converter external reference power supply pin (+3.3 V)
37	DAVSS	—	Ground pin
38	QUALITY	I	Noise detect signal input
39	VSM	I	S-meter voltage detect signal input
40	KEYIN1	I	Key signal input 1
41	KEYIN0	I	Key signal input 0
42	VSS	—	Ground pin
43	RCIN0	I	Rotary commander key signal input Not used in this set.
44 to 47	NCO	O	Not used. (open)
48	$\overline{\text{AD ON}}$	O	A/D converter power supply control signal output
49	MD0	I	Operation mode setting pin (Connect to VDD.)
50	MD1	I	Operation mode setting pin (Connect to VDD.)
51	MD2	I	Operation mode setting pin (Connect to VSS.)
52	KEYACK	I	Key acknowledgment detect signal input
53	TUATTIN	I	Tuner mute zero cross detect signal input Not used in this set.
54	BUIN	I	Back-up power supply detect signal input

Pin No.	Pin Name	I/O	Pin Description
55	NCO	O	Not used. (Open)
56	DAVN	I	RDS (Radio Data System) data block synchronized detect signal input Not used in this set.
57	NCO	O	Not used. (Open)
58	UNISI	I	SONY bus data signal input
59	UNISO	O	SONY bus data signal output
60	UNISCK	O	SONY bus clock signal output
61	Z MUTE	I	Mute signal input
62	$\overline{\text{NOSE SW}}$	I	Front panel attachment detect signal input "L": With panel, "H": Without panel
63	FLASH W	I	Memory mode change signal input Normally "H": Single chip mode, after reset "L": flash write mode
64	SIRCS	I	Remote control signal input
65 to 70	NCO	O	Not used. (Open)
71	RC IN1	I	Rotary commander shift key signal input Not used in this set.
72 to 74	NCO	O	Not used. (Open)
75	FSW OUT	O	D/D converter oscillator frequency shift control signal output "L": 350 kHz, "H": 415 kHz
76	NCO	O	Not used. (Open)
77	$\overline{\text{RESET}}$	I	CPU reset signal input
78	NCO (OPEN REQ)	O	Not used. (Open)
79	XIN	I	Low speed operation clock signal input (32.768 kHz)
80	XOUT	O	Low speed operation clock signal output (32.768 kHz)
81	VSS1	—	Ground pin
82	OSCIN	I	High speed operation clock signal input (18.432 MHz)
83	OSCOUT	O	High speed operation clock signal output (18.432 MHz)
84	VCC3	—	Power supply pin (+3.3 V)
85	CYRIL SEL	I	Cyril correspondence discrimination signal input "L": No correspondence
86	DEMOSEL	I	DEMO select signal input "H": DEMO on, "L": DEMO off
87	NCO	O	Not used. (Open)
88	$\overline{\text{SYSRST}}$	O	System reset signal output
89	FL ON	O	Fluorescent indicator tube power on/off control signal output
90	DD ON	O	D/D converter power on/off control signal output
91	USB OVER	I	USB overcurrent detection signal input "L": Overcurrent detection
92	USB ON	O	USB overcurrent detection IC control signal output "H": On, "L": Off
93	WAKE UP	O	Mechanism microcomputer wake up signal output "H": Wake up, "L": Sleep
94	CDON	I	CD mechanism servo power supply control request signal input
95	CDMON	I	CD mechanism deck power supply control request signal input
96	$\overline{\text{BUSON}}$	O	Bus on signal output
97	$\overline{\text{TESTIN}}$	I	Test mode detect signal input
98	TELATT	I	Telephone attenuate detect signal input
99	$\overline{\text{ACC IN}}$	I	Accessory power supply detect signal input
100	ATT	O	Audio mute control signal output

SECTION 5
EXPLODED VIEWS

NOTE:

- The mechanical parts with no reference number in the exploded views are not supplied.
- Items marked "*" are not stocked since they are seldom required for routine service. Some delay should be anticipated when ordering these items.
- -XX and -X mean standardized parts, so they may have some difference from the original one.
- Color Indication of Appearance Parts
  Example :
  KNOB, BALANCE (WHITE) ... (RED)
  ↑ Parts Color ↑ Cabinet's Color
- Accessories are given in the last of this parts list.
- Abbreviation
  CND : Canadian model
  IND : Indian model

The components identified by mark ⚠ or dotted line with mark ⚠ are critical for safety.
Replace only with part number specified.

Les composants identifiés par une marque ⚠ sont critiques pour la sécurité.
Ne les remplacer que par une piéce portant le numéro spécifié.

5-1. MAIN SECTION

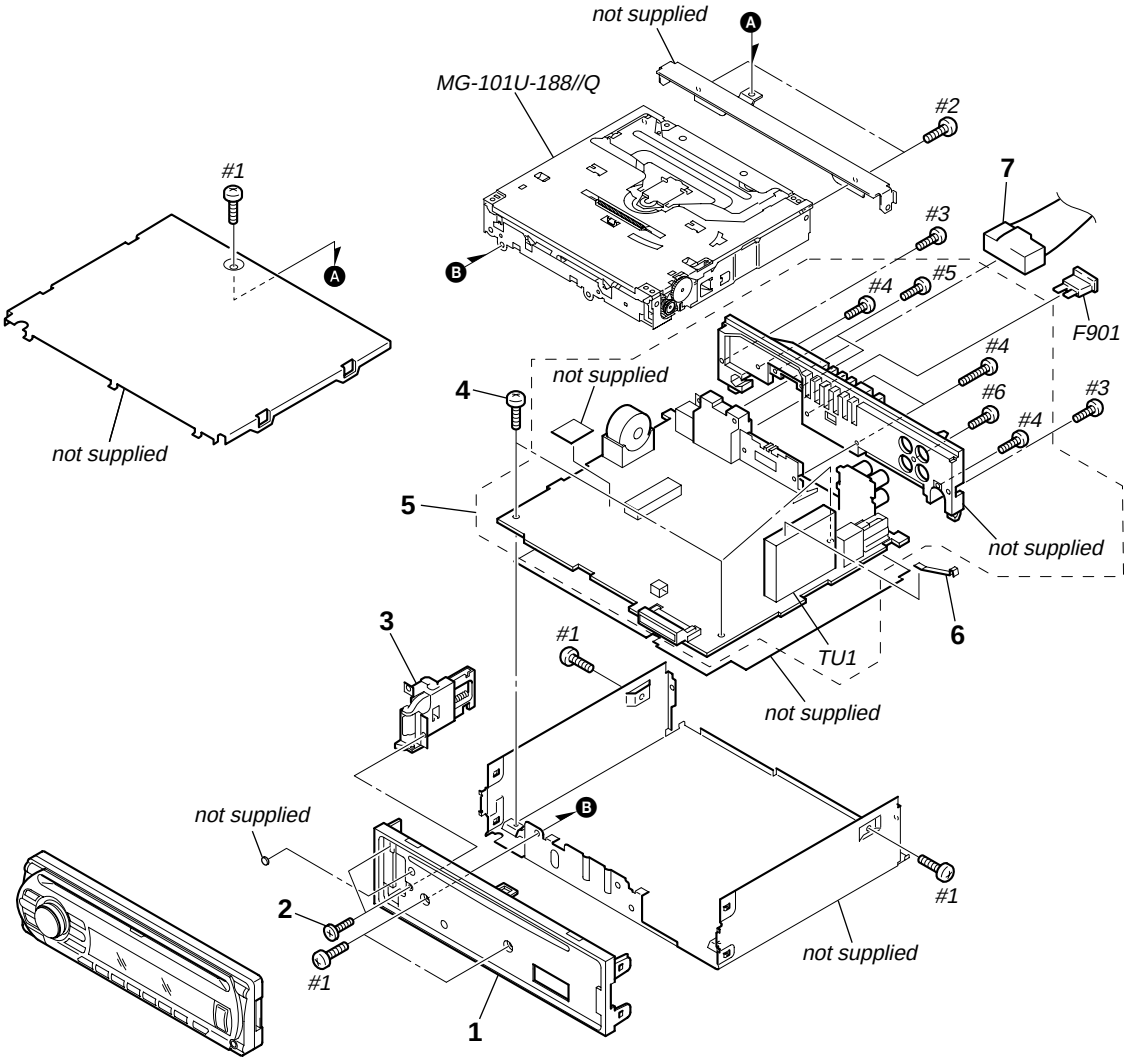

Ref. No.	Part No.	Description	Remark
1	X-2149-438-1	PANEL (FL-U) ASSY, SUB	
2	3-042-244-11	SCREW (T)	
3	X-2108-670-1	LOCK ASSY (S)	
4	2-050-124-01	SCREW +BTT 2.6X5	
5	A-1215-219-A	MAIN BOARD, COMPLETE (GT460U/GT460US)	
5	A-1215-247-A	MAIN BOARD, COMPLETE (GT41UW/GT410U)	
6	2-021-848-01	SHEET (TU), GROUND	
7	1-833-100-11	CORD (WITH CONNECTOR) (POWER) (EXCEPT GT460US:IND)	
7	1-833-762-11	CONNECTION CORD FOR AUTOMOBILE (POWER) (for Maruti Suzuki) (GT460US:IND)	

Ref. No.	Part No.	Description	Remark
F901	1-532-877-11	FUSE (BLADE TYPE) (AUTO FUSE) 10A	
TU1	A-3220-961-B	TUNER UNIT (TUX-032)	
#1	7-685-792-09	SCREW +PTT 2.6X6 (S)	
#2	7-685-790-01	SCREW +PTT 2.6X4 (S)	
#3	7-685-793-09	SCREW +PTT 2.6X8 (S)	
#4	7-685-794-09	SCREW +PTT 2.6X10 (S)	
#5	7-685-134-19	SCREW +P 2.6X8 TYPE2 NON-SLIT	
#6	7-621-284-40	SCREW +P 2.6X10	

5-2. FRONT PANEL SECTION

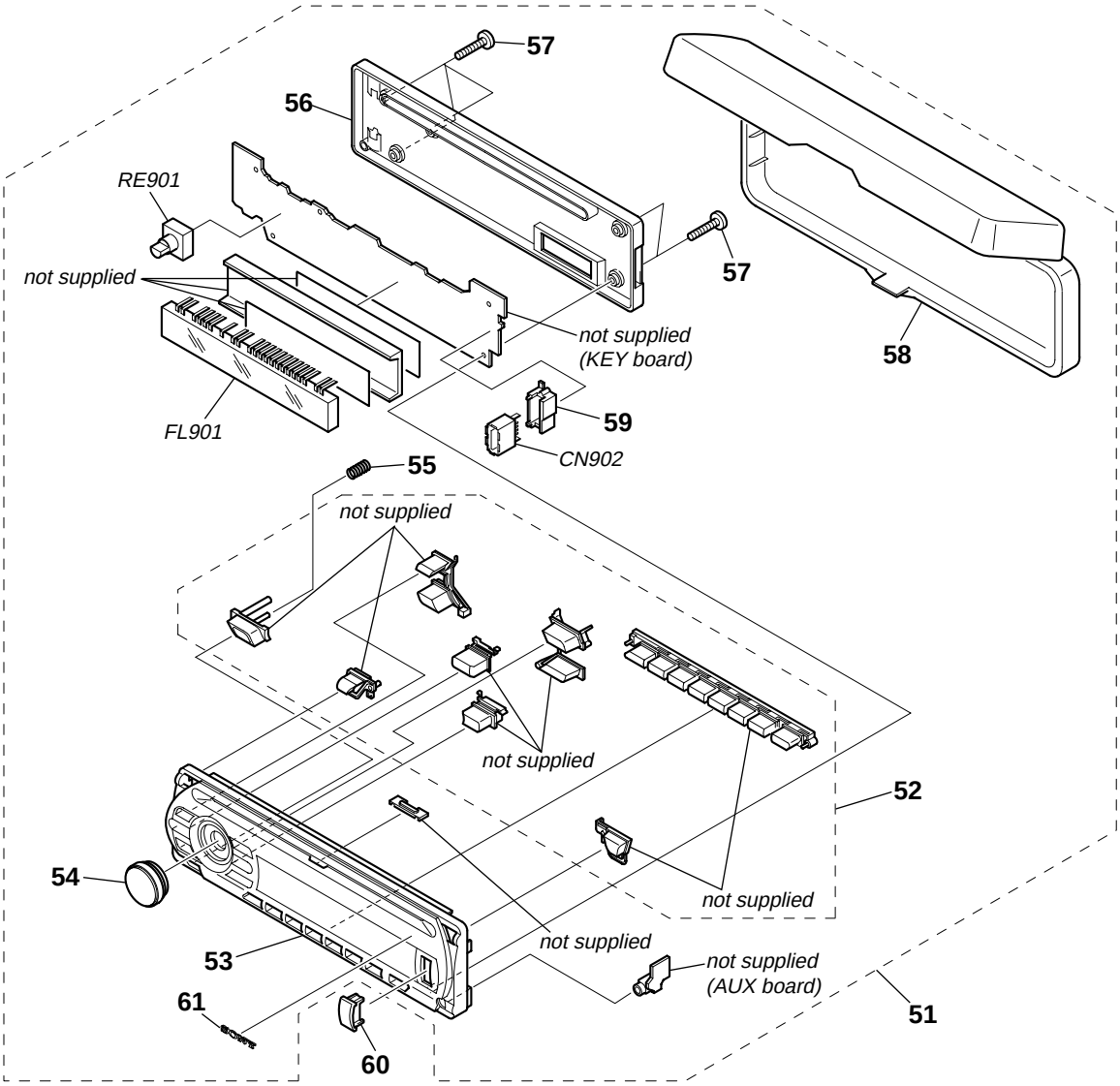

Ref. No.	Part No.	Description	Remark
51	A-1215-221-A	PANEL COMPLETE ASSY, FRONT (GT460US)	
51	A-1215-232-A	PANEL COMPLETE ASSY, FRONT (GT460U)	
51	A-1215-249-A	PANEL COMPLETE ASSY, FRONT (GT41UW:US)	
51	A-1215-256-A	PANEL COMPLETE ASSY, FRONT (GT410U:US)	
51	A-1222-410-A	PANEL COMPLETE ASSY, FRONT (GT41UW:CND)	
51	A-1222-411-A	PANEL COMPLETE ASSY, FRONT (GT410U:CND)	
52	X-2149-756-1	BUTTON ASSY (S) (GT460US)	
52	X-2149-757-1	BUTTON ASSY (S) (GT41UW/GT410U/GT460U)	
53	X-2149-760-1	PANEL (SV) ASSY, FRONT (GT460US)	
53	X-2149-761-1	PANEL (SV) ASSY, FRONT (GT460U)	
53	X-2149-762-1	PANEL (SV) ASSY, FRONT (GT41UW)	
53	X-2149-763-1	PANEL (SV) ASSY, FRONT (GT410U)	
54	X-2149-353-1	KNOB (VOL) (SV) ASSY	
55	2-693-599-01	SPRING (RELEASE)	
56	2-686-937-02	PANEL (FL-U), BACK	
57	3-250-543-21	SCREW (+B P-TITE M2)	
58	X-2149-228-2	CASE ASSY (for FRONT PANEL) (EXCEPT US)	
59	2-686-941-01	HOLDER (USB)	
60	X-2176-322-1	CAP (USB) ASSY	
61	3-251-320-01	EMBLEM (NO. 2.5), SONY	
CN902	1-820-877-11	CONNECTOR, USB (SOCKET) (USB)	
FL901	1-519-909-12	INDICATOR TUBE, FLUORESCENT	
RE901	1-479-481-13	ENCODER, ROTARY (PUSH SELECT,VOLUME)	

5-3. CD MECHANISM SECTION (MG-101U-188//Q)

NOTE: Refer to SUPPLEMENT-1 for disassembly of OPTICAL PICK-UP.

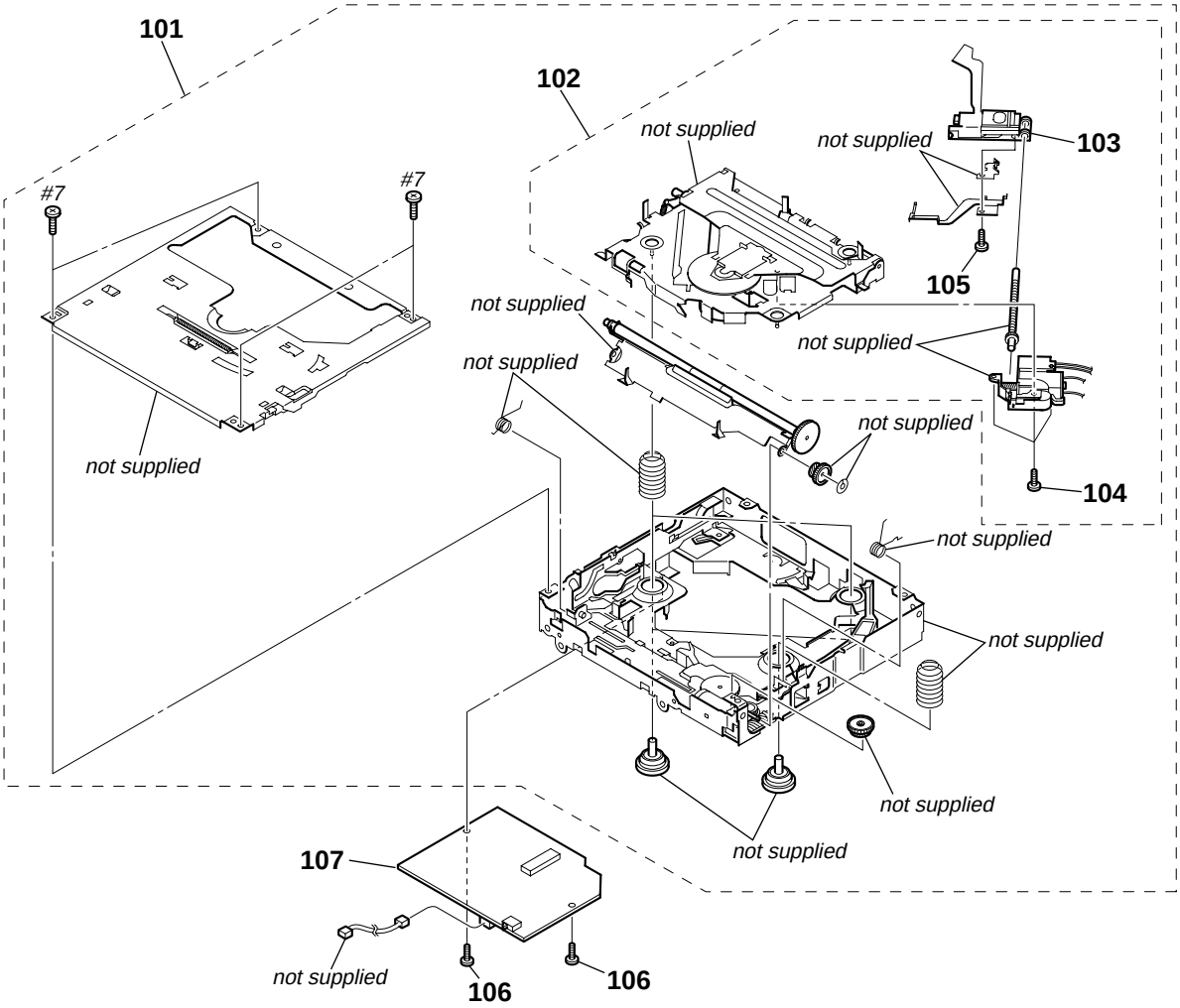

Ref. No.	Part No.	Description	Remark	Ref. No.	Part No.	Description	Remark
101	A-1177-168-A	MECHANICAL BLOCK ASSY		105	3-348-998-31	SCREW (M1.4X2.5), TAPPING, PAN	
102	A-1177-169-A	DAXEV//Q		106	3-352-758-31	SCREW (M1.7X2.5), TOOTHED LOCK	
⚠103	X-2149-672-1	SERVICE ASSY, OP (DAX-25A)		107	A-1206-357-A	SERVO BOARD, COMPLETE	
104	2-626-869-01	SCREW (M2X3), SERRATION		#7	7-627-000-08	SCREW, PRECISION +P 1.7X2.2 TYPE3	

SECTION 6
ELECTRICAL PARTS LIST

AUX KEY

NOTE:

- Due to standardization, replacements in the parts list may be different from the parts specified in the diagrams or the components used on the set.
- -XX and -X mean standardized parts, so they may have some difference from the original one.
- RESISTORS
  All resistors are in ohms.
  METAL:Metal-film resistor.
  METAL OXIDE: Metal oxide-film resistor.
  F:nonflammable
- Items marked "*" are not stocked since they are seldom required for routine service. Some delay should be anticipated when ordering these items.
- SEMICONDUCTORS
  In each case, u : µ, for example:
  uA.. : µA.. uPA.. : µPA..
  uPB.. : µPB.. uPC.. : µPC.. uPD.. : µPD..
- CAPACITORS
  uF : µF
- COILS
  uH : µH
- Abbreviation
  CND : Canadian model
  IND : Indian model

The components identified by mark ⚠ or dotted line with mark ⚠ are critical for safety.
Replace only with part number specified.

Les composants identifiés par une marque ⚠ sont critiques pour la sécurité.
Ne les remplacer que par une piéce portant le numéro spécifié.

When indicating parts by reference number, please include the board.

Ref. No.	Part No.	Description			Remark
		AUX BOARD			
		**********			
		< FERRITE BEAD >			
FB901	1-414-595-11	INDUCTOR, FERRITE BEAD			
FB902	1-414-595-11	INDUCTOR, FERRITE BEAD			
FB903	1-500-245-11	INDUCTOR, FERRITE BEAD			
		< JACK >			
J901	1-819-732-21	JACK (DIA. 3.5) (AUX)			
		KEY BOARD			
		**********			
		< CAPACITOR >			
C905	1-162-970-11	CERAMIC CHIP	0.01uF	10%	25V
C974	1-107-826-11	CERAMIC CHIP	0.1uF	10%	16V
C975	1-107-826-11	CERAMIC CHIP	0.1uF	10%	16V
C976	1-107-826-11	CERAMIC CHIP	0.1uF	10%	16V
C977	1-125-891-11	CERAMIC CHIP	0.47uF	10%	10V
C979	1-127-715-11	CERAMIC CHIP	0.22uF	10%	16V
C981	1-107-826-11	CERAMIC CHIP	0.1uF	10%	16V
C982	1-107-826-11	CERAMIC CHIP	0.1uF	10%	16V
C991	1-162-970-11	CERAMIC CHIP	0.01uF	10%	25V
C992	1-162-970-11	CERAMIC CHIP	0.01uF	10%	25V
		< CONNECTOR >			
CN901	1-820-620-11	PLUG, CONNECTOR 24P			
		< DIODE >			
D903	8-719-057-80	DIODE MA8180-M-TX			
D904	8-719-057-80	DIODE MA8180-M-TX			
D905	8-719-977-12	DIODE DTZ6.8B			
D906	8-719-977-12	DIODE DTZ6.8B			
D907	8-719-977-12	DIODE DTZ6.8B			
D908	8-719-977-12	DIODE DTZ6.8B			
D951	1-804-988-21	VARISTOR, CHIP (1608)			
D953	1-804-988-21	VARISTOR, CHIP (1608)			
D955	1-804-988-21	VARISTOR, CHIP (1608)			
D971	8-719-420-90	DIODE MA8051-M			
		< FERRITE BEAD >			
FB904	1-469-876-11	INDUCTOR, FERRITE BEAD			
FB905	1-469-876-11	INDUCTOR, FERRITE BEAD			
FB906	1-216-295-11	SHORT CHIP	0		
FB907	1-216-295-11	SHORT CHIP	0		
		< FLUORESCENT INDICATOR TUBE >			
FL901	1-519-909-12	INDICATOR TUBE, FLUORESCENT			
		< IC >			
IC971	6-600-163-01	IC RS-770 (IR)			
IC972	6-706-715-01	IC NJM2867F33(TE2)			
		< DIODE >			
LED841	8-719-078-21	LED SML-310PTT86 (⏏)			
LED842	8-719-078-21	LED SML-310PTT86 (CD INDICATOR)			
LED843	8-719-078-21	LED SML-310PTT86 (OFF)			
LED844	8-719-078-21	LED SML-310PTT86 (EQ3)			
LED845	8-719-078-21	LED SML-310PTT86 (BTM/CAT)			
LED846	8-719-078-21	LED SML-310PTT86 (SOURCE)			
LED847	8-719-078-21	LED SML-310PTT86 (MODE)			
LED850	8-719-078-21	LED SML-310PTT86 (DSPL/DIM)			
LED851	8-719-078-21	LED SML-310PTT86 (1/GP/ALBM –)			
LED852	8-719-078-21	LED SML-310PTT86 (2/GP/ALBM +)			
LED853	8-719-078-21	LED SML-310PTT86 (3/REP)			
LED854	8-719-078-21	LED SML-310PTT86 (4/SHUF)			
LED855	8-719-078-21	LED SML-310PTT86 (5)			
LED856	8-719-078-21	LED SML-310PTT86 (6/PAUSE)			
LED857	8-719-078-21	LED SML-310PTT86 (SCRL)			
LED861	8-719-078-21	LED SML-310PTT86 (RING ILLUMINATION)			
LED862	8-719-078-21	LED SML-310PTT86 (RING ILLUMINATION)			
LED863	8-719-078-21	LED SML-310PTT86 (RING ILLUMINATION)			
LED864	8-719-078-21	LED SML-310PTT86 (RING ILLUMINATION)			
LED941	8-719-053-09	LED SML-310VTT86 (⏏)			
LED942	8-719-053-09	LED SML-310VTT86 (CD INDICATOR)			
LED943	8-719-053-09	LED SML-310VTT86 (OFF)			
LED944	8-719-053-09	LED SML-310VTT86 (EQ3)			
LED945	8-719-053-09	LED SML-310VTT86 (BTM/CAT)			
LED946	8-719-053-09	LED SML-310VTT86 (SOURCE)			
LED947	8-719-053-09	LED SML-310VTT86 (MODE)			
LED950	8-719-053-09	LED SML-310VTT86 (DSPL/DIM)			
LED951	8-719-053-09	LED SML-310VTT86 (1/GP/ALBM –)			
LED952	8-719-053-09	LED SML-310VTT86 (2/GP/ALBM +)			
LED953	8-719-053-09	LED SML-310VTT86 (3/REP)			
LED954	8-719-053-09	LED SML-310VTT86 (4/SHUF)			
LED955	8-719-053-09	LED SML-310VTT86 (5)			
LED956	8-719-053-09	LED SML-310VTT86 (6/PAUSE)			

KEY

Ref. No.	Part No.	Description				Remark
LED957	8-719-053-09	LED SML-310VTT86 (SCRL)				
LED961	8-719-053-09	LED SML-310VTT86 (RING ILLUMINATION)				
LED962	8-719-053-09	LED SML-310VTT86 (RING ILLUMINATION)				
LED963	8-719-053-09	LED SML-310VTT86 (RING ILLUMINATION)				
		< COIL >				
LF901	1-457-223-11	COIL, COMMON MODE CHOKE				
		< SWITCH >				
LSW901	1-798-018-11	SWITCH, TACTILE (WITH LED) (▶▶ ▶▶I SEEK+)				
LSW902	1-798-018-11	SWITCH, TACTILE (WITH LED) (I◀◀ ◀◀ SEEK–)				
		< TRANSISTOR >				
Q881	8-729-600-22	TRANSISTOR 2SA1235-F				
Q882	8-729-600-22	TRANSISTOR 2SA1235-F				
Q883	8-729-600-22	TRANSISTOR 2SA1235-F				
Q991	6-550-752-01	TRANSISTOR DTC614TKT146				
Q992	6-550-752-01	TRANSISTOR DTC614TKT146				
		< RESISTOR >				
R841	1-216-810-11	METAL CHIP	120	5%	1/10W	
R842	1-216-810-11	METAL CHIP	120	5%	1/10W	
R843	1-216-811-11	METAL CHIP	150	5%	1/10W	
R844	1-216-810-11	METAL CHIP	120	5%	1/10W	
R845	1-216-811-11	METAL CHIP	150	5%	1/10W	
R846	1-216-810-11	METAL CHIP	120	5%	1/10W	
R847	1-216-811-11	METAL CHIP	150	5%	1/10W	
R848	1-216-810-11	METAL CHIP	120	5%	1/10W	
R849	1-216-807-11	METAL CHIP	68	5%	1/10W	
R850	1-216-807-11	METAL CHIP	68	5%	1/10W	
R851	1-216-807-11	METAL CHIP	68	5%	1/10W	
R852	1-216-807-11	METAL CHIP	68	5%	1/10W	
R853	1-216-811-11	METAL CHIP	150	5%	1/10W	
R854	1-216-810-11	METAL CHIP	120	5%	1/10W	
R861	1-216-811-11	METAL CHIP	150	5%	1/10W	
R862	1-216-810-11	METAL CHIP	120	5%	1/10W	
R863	1-216-811-11	METAL CHIP	150	5%	1/10W	
R864	1-216-810-11	METAL CHIP	120	5%	1/10W	
R881	1-216-821-11	METAL CHIP	1K	5%	1/10W	
R882	1-216-821-11	METAL CHIP	1K	5%	1/10W	
R883	1-216-821-11	METAL CHIP	1K	5%	1/10W	
R884	1-216-833-11	METAL CHIP	10K	5%	1/10W	
R885	1-216-833-11	METAL CHIP	10K	5%	1/10W	
R886	1-216-833-11	METAL CHIP	10K	5%	1/10W	
R887	1-216-845-11	METAL CHIP	100K	5%	1/10W	
R888	1-216-845-11	METAL CHIP	100K	5%	1/10W	
R889	1-216-845-11	METAL CHIP	100K	5%	1/10W	
R901	1-216-820-11	METAL CHIP	820	5%	1/10W	
R902	1-216-821-11	METAL CHIP	1K	5%	1/10W	
R903	1-216-821-11	METAL CHIP	1K	5%	1/10W	
R904	1-216-822-11	METAL CHIP	1.2K	5%	1/10W	
R905	1-216-823-11	METAL CHIP	1.5K	5%	1/10W	
R906	1-216-820-11	METAL CHIP	820	5%	1/10W	
R907	1-216-821-11	METAL CHIP	1K	5%	1/10W	
R908	1-216-821-11	METAL CHIP	1K	5%	1/10W	
R909	1-216-822-11	METAL CHIP	1.2K	5%	1/10W	
R910	1-216-823-11	METAL CHIP	1.5K	5%	1/10W	
R911	1-216-824-11	METAL CHIP	1.8K	5%	1/10W	
R912	1-216-825-11	METAL CHIP	2.2K	5%	1/10W	
R913	1-216-827-11	METAL CHIP	3.3K	5%	1/10W	
R914	1-216-828-11	METAL CHIP	3.9K	5%	1/10W	
R915	1-216-830-11	METAL CHIP	5.6K	5%	1/10W	
R921	1-216-295-11	SHORT CHIP	0			
R922	1-216-295-11	SHORT CHIP	0			
R941	1-216-813-11	METAL CHIP	220	5%	1/10W	
R942	1-216-813-11	METAL CHIP	220	5%	1/10W	
R943	1-216-812-11	METAL CHIP	180	5%	1/10W	
R944	1-216-811-11	METAL CHIP	150	5%	1/10W	
R945	1-216-812-11	METAL CHIP	180	5%	1/10W	
R946	1-216-811-11	METAL CHIP	150	5%	1/10W	
R947	1-216-812-11	METAL CHIP	180	5%	1/10W	
R948	1-216-811-11	METAL CHIP	150	5%	1/10W	
R949	1-216-809-11	METAL CHIP	100	5%	1/10W	
R950	1-216-809-11	METAL CHIP	100	5%	1/10W	
R951	1-216-809-11	METAL CHIP	100	5%	1/10W	
R952	1-216-809-11	METAL CHIP	100	5%	1/10W	
R953	1-216-812-11	METAL CHIP	180	5%	1/10W	
R954	1-216-811-11	METAL CHIP	150	5%	1/10W	
R961	1-216-809-11	METAL CHIP	100	5%	1/10W	
R962	1-216-809-11	METAL CHIP	100	5%	1/10W	
R971	1-216-809-11	METAL CHIP	100	5%	1/10W	
R975	1-216-811-11	METAL CHIP	150	5%	1/10W	
R976	1-216-811-11	METAL CHIP	150	5%	1/10W	
R977	1-216-809-11	METAL CHIP	100	5%	1/10W	
R978	1-216-864-11	SHORT CHIP	0			
R981	1-218-893-11	METAL CHIP	82K	0.5%	1/10W	
R982	1-216-841-11	METAL CHIP	47K	5%	1/10W	
R983	1-216-801-11	METAL CHIP	22	5%	1/10W	
R984	1-216-801-11	METAL CHIP	22	5%	1/10W	
R988	1-216-864-11	SHORT CHIP	0			
R989	1-216-845-11	METAL CHIP	100K	5%	1/10W	
R993	1-216-809-11	METAL CHIP	100	5%	1/10W	
R994	1-216-809-11	METAL CHIP	100	5%	1/10W	
R995	1-216-809-11	METAL CHIP	100	5%	1/10W	
		< NETWORK RESISTOR >				
RB901	1-239-662-81	RESISTOR, NETWORK 10X2				
		< ROTARY ENCODER >				
RE901	1-479-481-13	ENCODER, ROTARY (PUSH SELECT,VOLUME)				
		< SWITCH >				
S901	1-786-653-21	SWITCH, TACTILE (⏏)				
S902	1-786-653-21	SWITCH, TACTILE (OFF)				
S903	1-786-653-21	SWITCH, TACTILE (SOURCE)				
S904	1-786-653-21	SWITCH, TACTILE (EQ3)				
S906	1-786-653-21	SWITCH, TACTILE (BTM/CAT)				
S907	1-786-653-21	SWITCH, TACTILE (MODE)				
S908	1-786-653-21	SWITCH, TACTILE (DSPL/DIM)				
S909	1-786-653-21	SWITCH, TACTILE (1/GP/ALBM –)				
S910	1-786-653-21	SWITCH, TACTILE (2/GP/ALBM +)				
S911	1-786-653-21	SWITCH, TACTILE (3/REP)				
S912	1-786-653-21	SWITCH, TACTILE (4/SHUF)				

KEY MAIN

Ref. No.	Part No.	Description			Remark
S913	1-786-653-21	SWITCH, TACTILE (5)			
S914	1-786-653-21	SWITCH, TACTILE (6/PAUSE)			
S915	1-786-653-21	SWITCH, TACTILE (SCRL)			
**********					
	A-1215-219-A	MAIN BOARD, COMPLETE (GT460U/GT460US)			
	A-1215-247-A	MAIN BOARD, COMPLETE (GT41UW/GT410U)			
		**********			
	7-621-284-40	SCREW +P 2.6X10			
	7-685-134-19	SCREW +P 2.6X8 TYPE2 NON-SLIT			
	7-685-794-09	SCREW +PTT 2.6X10 (S)			
		< CAPACITOR >			
C2	1-126-947-11	ELECT	47uF	20%	35V
C3	1-162-970-11	CERAMIC CHIP	0.01uF	10%	25V
C5	1-124-589-11	ELECT	47uF	20%	16V
C6	1-162-970-11	CERAMIC CHIP	0.01uF	10%	25V
C7	1-162-970-11	CERAMIC CHIP	0.01uF	10%	25V
C8	1-162-970-11	CERAMIC CHIP	0.01uF	10%	25V
C15	1-107-826-11	CERAMIC CHIP	0.1uF	10%	16V
C151	1-126-960-11	ELECT	1uF	20%	50V
C152	1-126-960-11	ELECT	1uF	20%	50V
C153	1-126-961-11	ELECT	2.2uF	20%	50V
C157	1-163-009-11	CERAMIC CHIP	0.001uF	10%	50V
C158	1-163-017-00	CERAMIC CHIP	0.0047uF	10%	50V
C159	1-163-017-00	CERAMIC CHIP	0.0047uF	10%	50V
C301	1-115-340-11	CERAMIC CHIP	0.22uF	10%	25V
C302	1-162-970-11	CERAMIC CHIP	0.01uF	10%	25V
C303	1-128-551-11	ELECT	22uF	20%	63V
C304	1-115-340-11	CERAMIC CHIP	0.22uF	10%	25V
C305	1-162-970-11	CERAMIC CHIP	0.01uF	10%	25V
C306	1-124-233-11	ELECT	10uF	20%	16V
C307	1-162-970-11	CERAMIC CHIP	0.01uF	10%	25V
C308	1-124-233-11	ELECT	10uF	20%	16V
C309	1-115-340-11	CERAMIC CHIP	0.22uF	10%	25V
C312	1-115-340-11	CERAMIC CHIP	0.22uF	10%	25V
C313	1-162-970-11	CERAMIC CHIP	0.01uF	10%	25V
C314	1-124-233-11	ELECT	10uF	20%	16V
C315	1-162-970-11	CERAMIC CHIP	0.01uF	10%	25V
C316	1-124-233-11	ELECT	10uF	20%	16V
C317	1-125-889-11	CERAMIC CHIP	2.2uF	10%	10V
C318	1-162-923-11	CERAMIC CHIP	47PF	5%	50V
C319	1-127-715-11	CERAMIC CHIP	0.22uF	10%	16V
C320	1-162-970-11	CERAMIC CHIP	0.01uF	10%	25V
C325	1-115-340-11	CERAMIC CHIP	0.22uF	10%	25V
C329	1-162-970-11	CERAMIC CHIP	0.01uF	10%	25V
C330	1-115-340-11	CERAMIC CHIP	0.22uF	10%	25V
C361	1-127-715-11	CERAMIC CHIP	0.22uF	10%	16V
C362	1-127-715-11	CERAMIC CHIP	0.22uF	10%	16V
C363	1-126-160-11	ELECT	1uF	20%	50V
C364	1-126-160-11	ELECT	1uF	20%	50V
C365	1-126-960-11	ELECT	1uF	20%	50V
C366	1-126-960-11	ELECT	1uF	20%	50V
C401	1-124-234-00	ELECT	22uF	20%	16V
C402	1-162-970-11	CERAMIC CHIP	0.01uF	10%	25V
C403	1-124-584-00	ELECT	100uF	20%	10V
C405	1-124-234-00	ELECT	22uF	20%	16V
C406	1-124-257-00	ELECT	2.2uF	20%	50V

Ref. No.	Part No.	Description			Remark
C407	1-124-257-00	ELECT	2.2uF	20%	50V
C409	1-124-233-11	ELECT	10uF	20%	16V
C412	1-162-970-11	CERAMIC CHIP	0.01uF	10%	25V
C413	1-163-251-11	CERAMIC CHIP	100PF	5%	50V
C414	1-163-251-11	CERAMIC CHIP	100PF	5%	50V
C415	1-162-970-11	CERAMIC CHIP	0.01uF	10%	25V
C417	1-162-970-11	CERAMIC CHIP	0.01uF	10%	25V
C418	1-162-964-11	CERAMIC CHIP	0.001uF	10%	50V
C419	1-162-964-11	CERAMIC CHIP	0.001uF	10%	50V
C421	1-126-964-11	ELECT	10uF	20%	50V
C423	1-165-908-11	CERAMIC CHIP	1uF	10%	10V
C424	1-162-927-11	CERAMIC CHIP	100PF	5%	50V
C426	1-165-908-11	CERAMIC CHIP	1uF	10%	10V
C431	1-126-964-11	ELECT	10uF	20%	50V
C432	1-163-251-11	CERAMIC CHIP	100PF	5%	50V
C434	1-162-927-11	CERAMIC CHIP	100PF	5%	50V
C441	1-126-964-11	ELECT	10uF	20%	50V
C443	1-165-908-11	CERAMIC CHIP	1uF	10%	10V
C444	1-162-927-11	CERAMIC CHIP	100PF	5%	50V
C445	1-165-908-11	CERAMIC CHIP	1uF	10%	10V
C451	1-126-964-11	ELECT	10uF	20%	50V
C452	1-163-251-11	CERAMIC CHIP	100PF	5%	50V
C454	1-162-927-11	CERAMIC CHIP	100PF	5%	50V
C461	1-126-964-11	ELECT	10uF	20%	50V
C462	1-165-908-11	CERAMIC CHIP	1uF	10%	10V
C463	1-165-908-11	CERAMIC CHIP	1uF	10%	10V
C471	1-126-964-11	ELECT	10uF	20%	50V
C472	1-165-908-11	CERAMIC CHIP	1uF	10%	10V
C473	1-165-908-11	CERAMIC CHIP	1uF	10%	10V
C484	1-107-826-11	CERAMIC CHIP	0.1uF	10%	16V
C485	1-126-933-11	ELECT	100uF	20%	16V
C486	1-126-964-11	ELECT	10uF	20%	50V
C491	1-124-589-11	ELECT	47uF	20%	16V
C493	1-162-967-11	CERAMIC CHIP	0.0033uF	10%	50V
C494	1-162-967-11	CERAMIC CHIP	0.0033uF	10%	50V
C501	1-162-970-11	CERAMIC CHIP	0.01uF	10%	25V
C502	1-162-964-11	CERAMIC CHIP	0.001uF	10%	50V
C504	1-162-970-11	CERAMIC CHIP	0.01uF	10%	25V
C507	1-162-917-11	CERAMIC CHIP	15PF	5%	50V
C508	1-162-917-11	CERAMIC CHIP	15PF	5%	50V
C509	1-164-227-11	CERAMIC CHIP	0.022uF	10%	25V
C510	1-165-908-11	CERAMIC CHIP	1uF	10%	10V
C512	1-162-964-11	CERAMIC CHIP	0.001uF	10%	50V
C513	1-162-970-11	CERAMIC CHIP	0.01uF	10%	25V
C514	1-162-964-11	CERAMIC CHIP	0.001uF	10%	50V
C515	1-162-970-11	CERAMIC CHIP	0.01uF	10%	25V
C516	1-162-970-11	CERAMIC CHIP	0.01uF	10%	25V
C519	1-107-826-11	CERAMIC CHIP	0.1uF	10%	16V
C600	1-126-935-11	ELECT	470uF	20%	16V
C601	1-162-970-11	CERAMIC CHIP	0.01uF	10%	25V
C622	1-126-924-11	ELECT	330uF	20%	10V
C623	1-126-916-11	ELECT	1000uF	20%	6.3V
C624	1-124-584-00	ELECT	100uF	20%	10V
C625	1-124-584-00	ELECT	100uF	20%	10V
C626	1-124-584-00	ELECT	100uF	20%	10V
C681	1-162-970-11	CERAMIC CHIP	0.01uF	10%	25V
C682	1-162-970-11	CERAMIC CHIP	0.01uF	10%	25V
C683	1-124-584-00	ELECT	100uF	20%	10V

MAIN

Ref. No.	Part No.	Description			Remark
C701	1-131-868-81	ELECT	3300uF	20%	16V
C702	1-164-005-11	CERAMIC CHIP	0.47uF		25V
C703	1-164-005-11	CERAMIC CHIP	0.47uF		25V
C704	1-115-340-11	CERAMIC CHIP	0.22uF	10%	25V
C705	1-115-340-11	CERAMIC CHIP	0.22uF	10%	25V
C706	1-163-009-11	CERAMIC CHIP	0.001uF	10%	50V
C707	1-163-009-11	CERAMIC CHIP	0.001uF	10%	50V
C801	1-126-933-11	ELECT	100uF	20%	16V
C802	1-107-826-11	CERAMIC CHIP	0.1uF	10%	16V
C803	1-124-589-11	ELECT	47uF	20%	16V
C804	1-162-970-11	CERAMIC CHIP	0.01uF	10%	25V
C805	1-107-826-11	CERAMIC CHIP	0.1uF	10%	16V
C806	1-124-589-11	ELECT	47uF	20%	16V
C807	1-162-970-11	CERAMIC CHIP	0.01uF	10%	25V
C808	1-162-970-11	CERAMIC CHIP	0.01uF	10%	25V
C809	1-126-933-11	ELECT	100uF	20%	16V
C810	1-162-970-11	CERAMIC CHIP	0.01uF	10%	25V
C811	1-124-584-00	ELECT	100uF	20%	10V
C812	1-162-969-11	CERAMIC CHIP	0.0068uF	10%	25V
C814	1-107-826-11	CERAMIC CHIP	0.1uF	10%	16V
C815	1-126-933-11	ELECT	100uF	20%	16V
C816	1-162-970-11	CERAMIC CHIP	0.01uF	10%	25V
C818	1-126-933-11	ELECT	100uF	20%	16V
C819	1-126-933-11	ELECT	100uF	20%	16V
C820	1-165-908-11	CERAMIC CHIP	1uF	10%	10V
C890	1-162-964-11	CERAMIC CHIP	0.001uF	10%	50V
C891	1-162-964-11	CERAMIC CHIP	0.001uF	10%	50V
C892	1-165-908-11	CERAMIC CHIP	1uF	10%	10V
C905	1-162-964-11	CERAMIC CHIP	0.001uF	10%	50V
C921	1-165-908-11	CERAMIC CHIP	1uF	10%	10V
C924	1-165-908-11	CERAMIC CHIP	1uF	10%	10V
C951	1-165-908-11	CERAMIC CHIP	1uF	10%	10V
C953	1-216-864-11	SHORT CHIP	0		
		< CONNECTOR >			
CN300	1-774-701-21	PIN, CONNECTOR 16P			
CN350	1-820-611-11	CONNECTOR, BOARD TO BOARD 28P			
CN352	1-564-719-11	PIN, CONNECTOR (SMALL TYPE) 3P			
CN370	1-820-621-11	SOCKET, CONNECTOR 24P			
CNJ400	1-580-907-41	PLUG, CONNECTOR 8P (BUS CONTROL IN)			
		< DIODE >			
D2	8-719-977-03	DIODE	DTZ5.6B		
D101	8-719-988-61	DIODE	1SS355TE-17		
D102	8-719-988-61	DIODE	1SS355TE-17		
D103	8-719-977-12	DIODE	DTZ6.8B		
D104	8-719-977-12	DIODE	DTZ6.8B		
D105	8-719-977-12	DIODE	DTZ6.8B		
D106	8-719-977-12	DIODE	DTZ6.8B		
D107	8-719-977-12	DIODE	DTZ6.8B		
D108	8-719-977-12	DIODE	DTZ6.8B		
D109	8-719-977-12	DIODE	DTZ6.8B		
D110	8-719-977-12	DIODE	DTZ6.8B		
D111	8-719-977-12	DIODE	DTZ6.8B		
D112	8-719-977-12	DIODE	DTZ6.8B		
D113	8-719-977-12	DIODE	DTZ6.8B		
D151	1-805-043-11	ABSORBER, CHIP SURGE			
D152	1-805-043-11	ABSORBER, CHIP SURGE			

Ref. No.	Part No.	Description		Remark
D153	8-719-057-80	DIODE	MA8180-M-TX	
D156	8-719-977-12	DIODE	DTZ6.8B	
D301	6-500-522-01	DIODE	10EDB40-TA1B2	
D302	6-500-522-01	DIODE	10EDB40-TA1B2	
D303	6-500-522-01	DIODE	10EDB40-TA1B2	
D304	6-500-522-01	DIODE	10EDB40-TA1B2	
D305	6-500-522-01	DIODE	10EDB40-TA1B2	
D306	6-500-522-01	DIODE	10EDB40-TA1B2	
D307	6-500-522-01	DIODE	10EDB40-TA1B2	
D308	6-500-522-01	DIODE	10EDB40-TA1B2	
D309	6-500-522-01	DIODE	10EDB40-TA1B2	
D310	6-500-522-01	DIODE	10EDB40-TA1B2	
D311	6-500-522-01	DIODE	10EDB40-TA1B2	
D312	6-500-522-01	DIODE	10EDB40-TA1B2	
D353	6-501-013-01	DIODE	BAT54ALT1G	
D491	8-719-988-61	DIODE	1SS355TE-17	
D502	8-719-060-48	DIODE	RB751V-40TE-17	
D503	8-719-988-61	DIODE	1SS355TE-17	
D602	8-719-057-80	DIODE	MA8180-M-TX	
D603	8-719-422-64	DIODE	MA8062-M-TX	
D604	8-719-057-80	DIODE	MA8180-M-TX	
D605	8-719-057-80	DIODE	MA8180-M-TX	
D606	8-719-072-70	DIODE	MA2ZD14001S0	
D607	6-501-571-01	DIODE	1N5404-C311-3	
D702	8-719-057-80	DIODE	MA8180-M-TX	
D703	8-719-977-12	DIODE	DTZ6.8B	
D706	8-719-057-80	DIODE	MA8180-M-TX	
D707	8-719-057-80	DIODE	MA8180-M-TX	
D801	8-719-420-90	DIODE	MA8051-M-TX	
D802	6-501-657-01	DIODE	MA24D5000BS0	
D804	6-500-522-01	DIODE	10EDB40-TA1B2	
D901	8-719-057-80	DIODE	MA8180-M-TX	
		< IC >		
IC300	6-705-359-02	IC	TDA8588AJ/N2/R1	
IC401	6-710-065-01	IC	BD3442FS-E2	
IC501	6-807-100-01	IC	MB90F046PF-G-101E1	
IC601	6-703-884-01	IC	BA8271F-E2	
IC602	6-709-458-01	IC	XC61CN2802NR	
IC681	6-704-529-01	IC	XC6206P332PR	
IC801	6-709-213-01	IC	NJM2387ADL3(TE2)	
IC802	6-709-213-01	IC	NJM2387ADL3(TE2)	
IC803	6-707-911-01	IC	BD9778HFP	
IC804	6-710-624-01	IC	TPS2051BDRG4	
		< JACK >		
J1	1-815-185-13	JACK (ANTENNA)		
J652	1-774-699-12	JACK, PIN 4P (BUS AUDIO IN, AUDIO OUT REAR/SUB)		
		< JUMPER RESISTOR >		
JC1	1-216-864-11	SHORT CHIP	0	
JC4	1-216-296-11	SHORT CHIP	0	
JC5	1-216-296-11	SHORT CHIP	0	
JC8	1-216-296-11	SHORT CHIP	0	
JC9	1-216-864-11	SHORT CHIP	0	
JC10	1-216-296-11	SHORT CHIP	0	
JC11	1-216-864-11	SHORT CHIP	0	

Ref. No.	Part No.	Description		Remark
JC12	1-216-296-11	SHORT CHIP	0	
JC14	1-216-296-11	SHORT CHIP	0	
JC16	1-216-296-11	SHORT CHIP	0	
JC17	1-216-864-11	SHORT CHIP	0	
JC18	1-216-864-11	SHORT CHIP	0	
JC19	1-216-296-11	SHORT CHIP	0	
JC21	1-216-296-11	SHORT CHIP	0	
JC22	1-216-296-11	SHORT CHIP	0	
JC23	1-216-296-11	SHORT CHIP	0	
JC24	1-216-864-11	SHORT CHIP	0	
JC28	1-216-864-11	SHORT CHIP	0	
JC29	1-216-296-11	SHORT CHIP	0	
JC30	1-216-296-11	SHORT CHIP	0	
JC31	1-216-296-11	SHORT CHIP	0	
JC32	1-216-296-11	SHORT CHIP	0	
JC33	1-216-296-11	SHORT CHIP	0	
JC36	1-216-864-11	SHORT CHIP	0	
JC38	1-216-296-11	SHORT CHIP	0 (GT41UW/GT410U)	
JC401	1-216-296-11	SHORT CHIP	0	
JC705	1-216-296-11	SHORT CHIP	0	
JC810	1-216-296-11	SHORT CHIP	0	
JC811	1-216-296-11	SHORT CHIP	0	
JC901	1-216-864-11	SHORT CHIP	0	
JC902	1-216-296-11	SHORT CHIP	0	
JC903	1-216-296-11	SHORT CHIP	0	
JC904	1-216-864-11	SHORT CHIP	0	
JC905	1-216-864-11	SHORT CHIP	0	
JC906	1-216-296-11	SHORT CHIP	0	
JC907	1-216-864-11	SHORT CHIP	0	
JC909	1-216-296-11	SHORT CHIP	0	
JC910	1-216-864-11	SHORT CHIP	0	
JC911	1-216-296-11	SHORT CHIP	0	
JC912	1-216-296-11	SHORT CHIP	0	
JC913	1-216-864-11	SHORT CHIP	0	
JC914	1-216-864-11	SHORT CHIP	0	
JC920	1-216-864-11	SHORT CHIP	0	
JC921	1-216-864-11	SHORT CHIP	0	
JC922	1-216-864-11	SHORT CHIP	0	
JC923	1-216-864-11	SHORT CHIP	0	
JC924	1-216-296-11	SHORT CHIP	0	
JC926	1-216-296-11	SHORT CHIP	0	
JC927	1-216-864-11	SHORT CHIP	0	
JC928	1-216-296-11	SHORT CHIP	0	
JC929	1-216-296-11	SHORT CHIP	0	
JC930	1-216-864-11	SHORT CHIP	0	
JC931	1-216-864-11	SHORT CHIP	0	
JC932	1-216-864-11	SHORT CHIP	0	
JC933	1-216-864-11	SHORT CHIP	0	
JC934	1-216-296-11	SHORT CHIP	0	
JC935	1-216-296-11	SHORT CHIP	0	
JC936	1-216-296-11	SHORT CHIP	0	
JC938	1-216-296-11	SHORT CHIP	0	
JC939	1-216-296-11	SHORT CHIP	0	
JC940	1-216-296-11	SHORT CHIP	0	
JC941	1-216-864-11	SHORT CHIP	0	
JC942	1-216-864-11	SHORT CHIP	0	
JC943	1-216-296-11	SHORT CHIP	0	

Ref. No.	Part No.	Description				Remark
		< COIL >				
L1	1-216-295-11	SHORT CHIP	0			
L4	1-216-864-11	SHORT CHIP	0			
L151	1-500-245-11	INDUCTOR, FERRITE BEAD				
L300	1-456-617-11	COIL, CHOKE				
L401	1-216-864-11	SHORT CHIP	0			
L402	1-216-295-11	SHORT CHIP	0			
L403	1-216-295-11	SHORT CHIP	0			
L405	1-469-876-11	INDUCTOR, FERRITE BEAD				
L406	1-500-245-11	INDUCTOR, FERRITE BEAD				
L407	1-216-864-11	SHORT CHIP	0			
L409	1-469-844-11	INDUCTOR	2.2uH			
L410	1-216-864-11	SHORT CHIP	0			
L411	1-216-864-11	SHORT CHIP	0			
L501	1-216-864-11	SHORT CHIP	0			
L802	1-416-831-11	INDUCTOR	100uH			
L803	1-457-384-11	COIL, CHOKE	47uH			
L804	1-216-295-11	SHORT CHIP	0			
L805	1-216-295-11	SHORT CHIP	0			
L818	1-457-383-11	COIL, CHOKE	100uH			
L901	1-216-295-11	SHORT CHIP	0			
L902	1-469-844-11	INDUCTOR	2.2uH			
		< TRANSISTOR >				
Q3	6-551-431-01	TRANSISTOR	2SC6027T100-QR			
Q401	8-729-027-44	TRANSISTOR	DTC114TKA-T146			
Q402	8-729-027-44	TRANSISTOR	DTC114TKA-T146			
Q411	8-729-027-43	TRANSISTOR	DTC114EKA-T146			
Q412	8-729-027-23	TRANSISTOR	DTA114EKA-T146			
Q420	8-729-027-44	TRANSISTOR	DTC114TKA-T146			
Q432	6-550-752-01	TRANSISTOR	DTC614TKT146			
Q440	8-729-027-44	TRANSISTOR	DTC114TKA-T146			
Q452	6-550-752-01	TRANSISTOR	DTC614TKT146			
Q460	8-729-027-44	TRANSISTOR	DTC114TKA-T146			
Q470	8-729-027-44	TRANSISTOR	DTC114TKA-T146			
Q491	8-729-027-23	TRANSISTOR	DTA114EKA-T146			
Q492	8-729-027-43	TRANSISTOR	DTC114EKA-T146			
Q605	8-729-027-43	TRANSISTOR	DTC114EKA-T146			
Q664	8-729-027-23	TRANSISTOR	DTA114EKA-T146			
Q702	8-729-120-28	TRANSISTOR	2SC1623-L5L6			
Q805	8-729-027-43	TRANSISTOR	DTC114EKA-T146			
		< RESISTOR >				
R2	1-216-839-11	METAL CHIP	33K	5%	1/10W	
R3	1-216-843-11	METAL CHIP	68K	5%	1/10W	
R4	1-216-839-11	METAL CHIP	33K	5%	1/10W	
R5	1-216-843-11	METAL CHIP	68K	5%	1/10W	
R6	1-216-809-11	METAL CHIP	100	5%	1/10W	
R7	1-216-809-11	METAL CHIP	100	5%	1/10W	
R9	1-216-843-11	METAL CHIP	68K	5%	1/10W	
R10	1-216-821-11	METAL CHIP	1K	5%	1/10W	
R12	1-216-864-11	SHORT CHIP	0			
R13	1-216-864-11	SHORT CHIP	0			
R61	1-216-864-11	SHORT CHIP	0			
R150	1-216-864-11	SHORT CHIP	0			
R151	1-216-817-11	METAL CHIP	470	5%	1/10W	
R152	1-216-817-11	METAL CHIP	470	5%	1/10W	

MAIN

Ref. No.	Part No.	Description			Remark
R153	1-216-834-11	METAL CHIP	12K	5%	1/10W
R154	1-216-834-11	METAL CHIP	12K	5%	1/10W
R155	1-216-825-11	METAL CHIP	2.2K	5%	1/10W
R156	1-216-864-11	SHORT CHIP	0		
R157	1-216-864-11	SHORT CHIP	0		
R158	1-216-864-11	SHORT CHIP	0		
R301	1-216-811-11	METAL CHIP	150	5%	1/10W
R302	1-216-841-11	METAL CHIP	47K	5%	1/10W
R351	1-216-845-11	METAL CHIP	100K	5%	1/10W
R354	1-216-864-11	SHORT CHIP	0		
R355	1-216-833-11	METAL CHIP	10K	5%	1/10W
R356	1-216-833-11	METAL CHIP	10K	5%	1/10W
R357	1-216-821-11	METAL CHIP	1K	5%	1/10W
R358	1-216-821-11	METAL CHIP	1K	5%	1/10W
R401	1-216-817-11	METAL CHIP	470	5%	1/10W
R402	1-216-817-11	METAL CHIP	470	5%	1/10W
R403	1-216-837-11	METAL CHIP	22K	5%	1/10W
R404	1-216-837-11	METAL CHIP	22K	5%	1/10W
R411	1-216-864-11	SHORT CHIP	0		
R420	1-216-809-11	METAL CHIP	100	5%	1/10W
R421	1-216-821-11	METAL CHIP	1K	5%	1/10W
R430	1-216-809-11	METAL CHIP	100	5%	1/10W
R431	1-216-809-11	METAL CHIP	100	5%	1/10W
R440	1-216-809-11	METAL CHIP	100	5%	1/10W
R442	1-216-821-11	METAL CHIP	1K	5%	1/10W
R447	1-216-833-11	METAL CHIP	10K	5%	1/10W
R448	1-216-833-11	METAL CHIP	10K	5%	1/10W
R449	1-216-833-11	METAL CHIP	10K	5%	1/10W
R450	1-216-833-11	METAL CHIP	10K	5%	1/10W
R451	1-216-809-11	METAL CHIP	100	5%	1/10W
R452	1-216-809-11	METAL CHIP	100	5%	1/10W
R460	1-216-809-11	METAL CHIP	100	5%	1/10W
R461	1-216-821-11	METAL CHIP	1K	5%	1/10W
R462	1-216-833-11	METAL CHIP	10K	5%	1/10W
R470	1-216-809-11	METAL CHIP	100	5%	1/10W
R471	1-216-821-11	METAL CHIP	1K	5%	1/10W
R472	1-216-833-11	METAL CHIP	10K	5%	1/10W
R485	1-218-883-11	METAL CHIP	33K	0.5%	1/10W
R491	1-216-805-11	METAL CHIP	47	5%	1/10W
R493	1-216-864-11	SHORT CHIP	0		
R502	1-216-809-11	METAL CHIP	100	5%	1/10W
R503	1-216-809-11	METAL CHIP	100	5%	1/10W
R504	1-218-871-11	METAL CHIP	10K	0.5%	1/10W
R505	1-218-871-11	METAL CHIP	10K	0.5%	1/10W
R507	1-216-845-11	METAL CHIP	100K	5%	1/10W
R509	1-216-809-11	METAL CHIP	100	5%	1/10W
R510	1-216-809-11	METAL CHIP	100	5%	1/10W
R511	1-216-809-11	METAL CHIP	100	5%	1/10W
R517	1-216-841-11	METAL CHIP	47K	5%	1/10W
R519	1-216-845-11	METAL CHIP	100K	5%	1/10W
R520	1-216-809-11	METAL CHIP	100	5%	1/10W
R521	1-216-825-11	METAL CHIP	2.2K	5%	1/10W
R522	1-216-825-11	METAL CHIP	2.2K	5%	1/10W
R523	1-216-809-11	METAL CHIP	100	5%	1/10W
R526	1-216-845-11	METAL CHIP	100K	5%	1/10W
R529	1-216-809-11	METAL CHIP	100	5%	1/10W
R531	1-216-841-11	METAL CHIP	47K	5%	1/10W
R532	1-216-845-11	METAL CHIP	100K	5%	1/10W
R533	1-216-845-11	METAL CHIP	100K	5%	1/10W
R534	1-216-833-11	METAL CHIP	10K	5%	1/10W
R536	1-216-845-11	METAL CHIP	100K	5%	1/10W
R537	1-216-845-11	METAL CHIP	100K	5%	1/10W (GT460U/GT460US)
R538	1-216-845-11	METAL CHIP	100K	5%	1/10W (GT41UW/GT410U)
R540	1-216-845-11	METAL CHIP	100K	5%	1/10W
R544	1-216-809-11	METAL CHIP	100	5%	1/10W
R545	1-216-845-11	METAL CHIP	100K	5%	1/10W (GT460U/GT460US)
R546	1-216-845-11	METAL CHIP	100K	5%	1/10W (GT460U/GT460US)
R550	1-216-845-11	METAL CHIP	100K	5%	1/10W (GT460U/GT460US)
R551	1-216-845-11	METAL CHIP	100K	5%	1/10W (GT41UW/GT410U)
R552	1-216-845-11	METAL CHIP	100K	5%	1/10W (GT41UW/GT410U)
R553	1-216-839-11	METAL CHIP	33K	5%	1/10W
R555	1-216-845-11	METAL CHIP	100K	5%	1/10W
R556	1-216-845-11	METAL CHIP	100K	5%	1/10W
R557	1-216-809-11	METAL CHIP	100	5%	1/10W
R558	1-216-833-11	METAL CHIP	10K	5%	1/10W
R559	1-216-845-11	METAL CHIP	100K	5%	1/10W
R561	1-216-845-11	METAL CHIP	100K	5%	1/10W
R563	1-216-845-11	METAL CHIP	100K	5%	1/10W
R565	1-216-845-11	METAL CHIP	100K	5%	1/10W
R567	1-216-845-11	METAL CHIP	100K	5%	1/10W
R568	1-216-849-11	METAL CHIP	220K	5%	1/10W
R569	1-216-845-11	METAL CHIP	100K	5%	1/10W
R570	1-216-809-11	METAL CHIP	100	5%	1/10W
R591	1-216-864-11	SHORT CHIP	0		
R592	1-216-809-11	METAL CHIP	100	5%	1/10W
R593	1-216-809-11	METAL CHIP	100	5%	1/10W
R595	1-216-833-11	METAL CHIP	10K	5%	1/10W
R596	1-216-833-11	METAL CHIP	10K	5%	1/10W
R597	1-216-864-11	SHORT CHIP	0		
R598	1-216-864-11	SHORT CHIP	0		
R599	1-216-864-11	SHORT CHIP	0		
R600	1-216-845-11	METAL CHIP	100K	5%	1/10W
R601	1-216-851-11	METAL CHIP	330K	5%	1/10W
R602	1-216-851-11	METAL CHIP	330K	5%	1/10W
R603	1-216-821-11	METAL CHIP	1K	5%	1/10W
R604	1-216-835-11	METAL CHIP	15K	5%	1/10W
R606	1-216-821-11	METAL CHIP	1K	5%	1/10W
R607	1-216-821-11	METAL CHIP	1K	5%	1/10W
R611	1-216-864-11	SHORT CHIP	0		
R612	1-216-809-11	METAL CHIP	100	5%	1/10W
R615	1-216-809-11	METAL CHIP	100	5%	1/10W
R616	1-216-864-11	SHORT CHIP	0		
R636	1-216-845-11	METAL CHIP	100K	5%	1/10W
R671	1-216-809-11	METAL CHIP	100	5%	1/10W
R672	1-216-809-11	METAL CHIP	100	5%	1/10W
R673	1-218-871-11	METAL CHIP	10K	0.5%	1/10W
R674	1-216-845-11	METAL CHIP	100K	5%	1/10W
R705	1-249-425-11	CARBON	4.7K	5%	1/4W
R706	1-216-841-11	METAL CHIP	47K	5%	1/10W
R707	1-216-841-11	METAL CHIP	47K	5%	1/10W

Ref. No.	Part No.	Description			Remark
R708	1-216-829-11	METAL CHIP	4.7K	5%	1/10W
R709	1-216-833-11	METAL CHIP	10K	5%	1/10W
R710	1-216-864-11	SHORT CHIP	0		
R800	1-216-829-11	METAL CHIP	4.7K	5%	1/10W
R802	1-216-825-11	METAL CHIP	2.2K	5%	1/10W
R803	1-216-825-11	METAL CHIP	2.2K	5%	1/10W
R809	1-216-821-11	METAL CHIP	1K	5%	1/10W
R810	1-216-832-11	METAL CHIP	8.2K	5%	1/10W
R811	1-216-821-11	METAL CHIP	1K	5%	1/10W
R812	1-216-822-11	METAL CHIP	1.2K	5%	1/10W
R813	1-216-821-11	METAL CHIP	1K	5%	1/10W
R814	1-216-823-11	METAL CHIP	1.5K	5%	1/10W
R815	1-216-829-11	METAL CHIP	4.7K	5%	1/10W
R816	1-218-883-11	METAL CHIP	33K	0.5%	1/10W
R817	1-218-869-11	METAL CHIP	8.2K	0.5%	1/10W
R818	1-218-878-11	METAL CHIP	20K	0.5%	1/10W
R819	1-216-844-11	METAL CHIP	82K	5%	1/10W
R820	1-216-851-11	METAL CHIP	330K	5%	1/10W
R890	1-216-864-11	SHORT CHIP	0		
R891	1-216-864-11	SHORT CHIP	0		
R901	1-216-809-11	METAL CHIP	100	5%	1/10W
R902	1-216-809-11	METAL CHIP	100	5%	1/10W
R903	1-216-809-11	METAL CHIP	100	5%	1/10W
R910	1-216-864-11	SHORT CHIP	0		
R912	1-216-864-11	SHORT CHIP	0		
R913	1-216-864-11	SHORT CHIP	0		
R914	1-216-190-00	RES-CHIP	470	5%	1/8W
R915	1-216-190-00	RES-CHIP	470	5%	1/8W
R916	1-216-190-00	RES-CHIP	470	5%	1/8W
R917	1-216-845-11	METAL CHIP	100K	5%	1/10W
R918	1-216-864-11	SHORT CHIP	0		
R919	1-216-864-11	SHORT CHIP	0		
R920	1-216-864-11	SHORT CHIP	0		
R923	1-216-864-11	SHORT CHIP	0		
R924	1-216-845-11	METAL CHIP	100K	5%	1/10W
R925	1-216-864-11	SHORT CHIP	0		
R926	1-216-864-11	SHORT CHIP	0		
R927	1-216-864-11	SHORT CHIP	0		
R951	1-216-797-11	METAL CHIP	10	5%	1/10W
R952	1-216-797-11	METAL CHIP	10	5%	1/10W
R961	1-216-864-11	SHORT CHIP	0		
		< SWITCH >			
S103	1-786-826-11	SWITCH, TACTILE (RESET)			
S501	1-571-478-11	SWITCH, SLIDE (FREQUENCY SELECT) (GT460U/GT460US)			
		< THERMISTOR (POSITIVE) >			
TH400	1-803-350-21	THERMISTOR, POSITIVE			
		< TUNER UNIT >			
TU1	A-3220-961-B	TUNER UNIT (TUX-032)			
		< VIBRATOR >			
X501	1-813-524-21	VIBRATOR, CERAMIC (18.432MHz)			
X502	1-813-202-11	VIBRATOR, CRYSTAL (32.768kHz)			

****

Ref. No.	Part No.	Description	Remark
	A-1206-357-A	SERVO BOARD, COMPLETE	
		**********	

****

		MISCELLANEOUS	
		**********	
7	1-833-100-11	CORD (WITH CONNECTOR) (POWER) (EXCEPT GT460US:IND)	
7	1-833-762-11	CONNECTION CORD FOR AUTOMOBILE (POWER) (for Maruti Suzuki) (GT460US:IND)	
⚠103	X-2149-672-1	SERVICE ASSY, OP (DAX-25A)	
CN902	1-820-877-11	CONNECTOR, USB (SOCKET) (USB)	
F901	1-532-877-11	FUSE (BLADE TYPE) (AUTO FUSE) 10A	

****

		ACCESSORIES	
		**********	
	1-479-077-13	REMOTE COMMANDER (RM-X151) (GT460U/GT460US)	
	2-548-729-01	LID, BATTERY CASE (for RM-X151) (GT460U/GT460US)	
	2-890-967-11	MANUAL, INSTRUCTION (ENGLISH,SPANISH) (GT41UW:US)	
	2-890-967-21	MANUAL, INSTRUCTION (ENGLISH,FRENCH) (GT41UW:CND/GT410U)	
	2-890-967-41	MANUAL, INSTRUCTION (ENGLISH,SPANISH, SIMPLIFIED CHINESE) (GT460U/GT460US)	
	2-890-968-11	MANUAL, INSTRUCTION, INSTALL (ENGLISH, SPANISH) (GT41UW:US)	
	2-890-968-21	MANUAL, INSTRUCTION, INSTALL (ENGLISH, FRENCH) (GT41UW:CND/GT410U)	
	2-890-968-41	MANUAL, INSTRUCTION, INSTALL (ENGLISH, SPANISH,SIMPLIFIED CHINESE) (GT460U/GT460US)	
	X-2149-228-2	CASE ASSY (for FRONT PANEL) (EXCEPT US)	
	X-2176-322-1	CAP (USB) ASSY	

****

Ref. No.	Part No.	Description	Remark
		PARTS FOR INSTALLATION AND CONNECTIONS	
		**********	
151	X-3382-647-1	FRAME ASSY, FITTING	
152	2-686-803-01	COLLAR	
152	3-255-785-02	COLLAR (1DIN) (for Maruti Suzuki)	(GT460US:IND)
153	3-246-471-01	KEY (FRAME)	
154	X-3381-154-1	SCREW ASSY (BS4), FITTING	(GT460U/GT460US)
155	3-349-410-11	BUSHING (GT460U/GT460US)	
156	3-934-325-01	SCREW, +K (5X8) TAPPING	
157	1-833-100-11	CORD (WITH CONNECTOR) (POWER)	(EXCEPT GT460US:IND)
157	1-833-762-11	CONNECTION CORD FOR AUTOMOBILE (POWER) (for Maruti Suzuki)	(GT460US:IND)

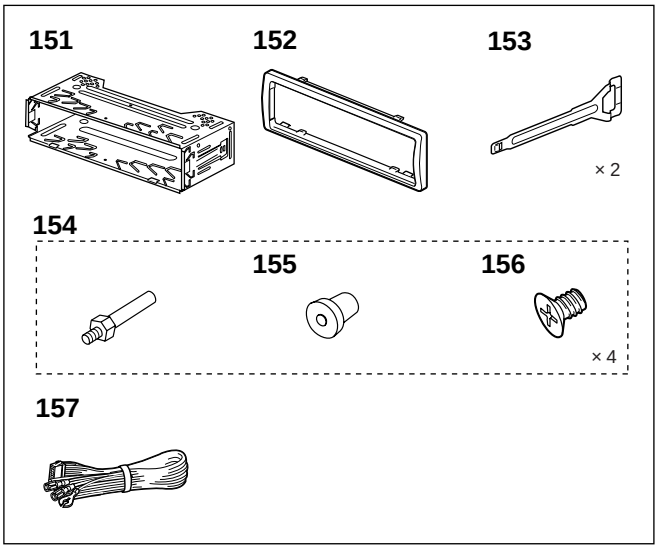

CDX-GT41UW/GT410U/ GT460U/GT460US

SONY

SERVICE MANUAL

Ver. 1.2 2007.03

US Model
Canadian Model
CDX-GT41UW/GT410U
E Model
CDX-GT460U/GT460US
Chinese Model
CDX-GT460U

SUPPLEMENT-1

File this supplement with the service manual.

Subject: Notes for removal of the OPTICAL PICK-UP added.

DISASSEMBLY

1. CHUCKING ARM SUB ASSY

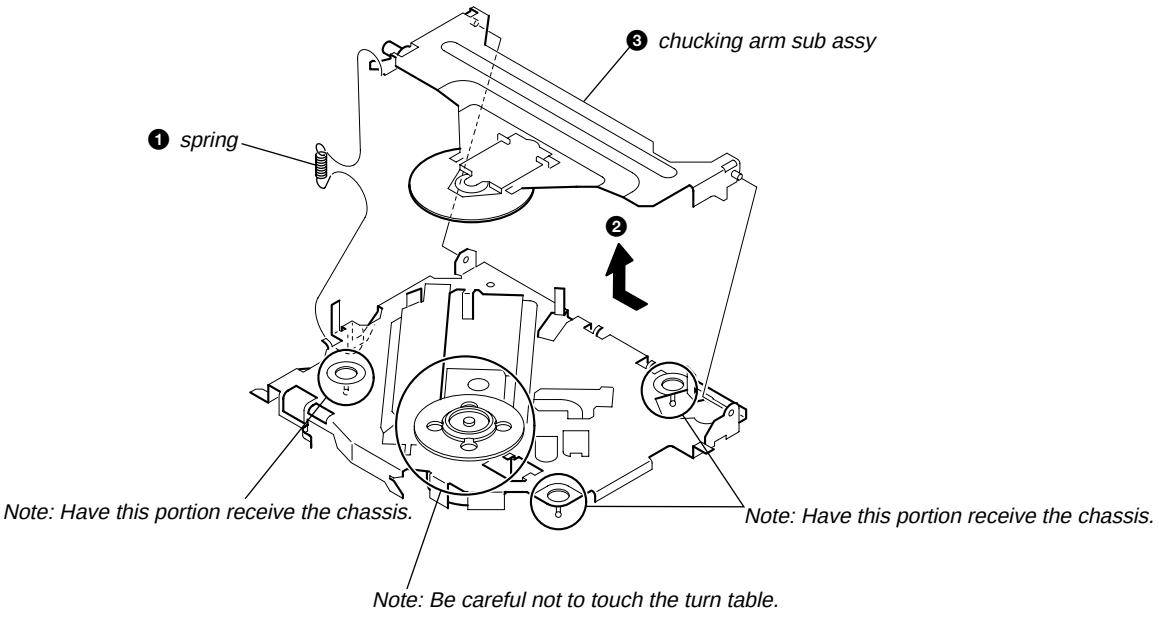

9-887-470-81

2. SLED MOTOR ASSY

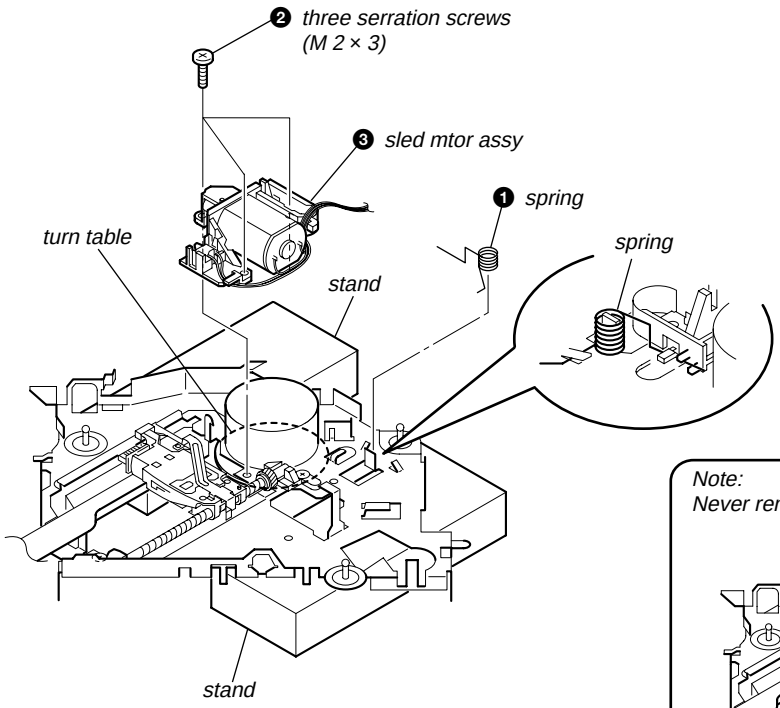

Note: Place the stand with care not to touch the turn table.

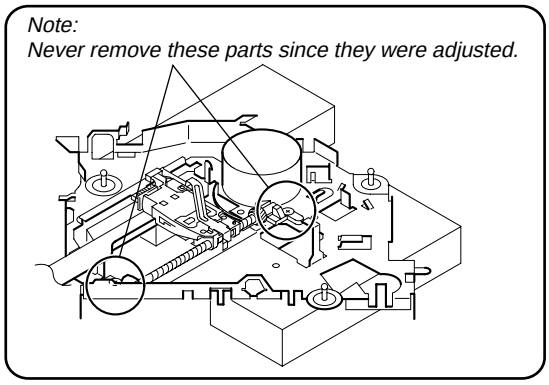

Note for Assembly

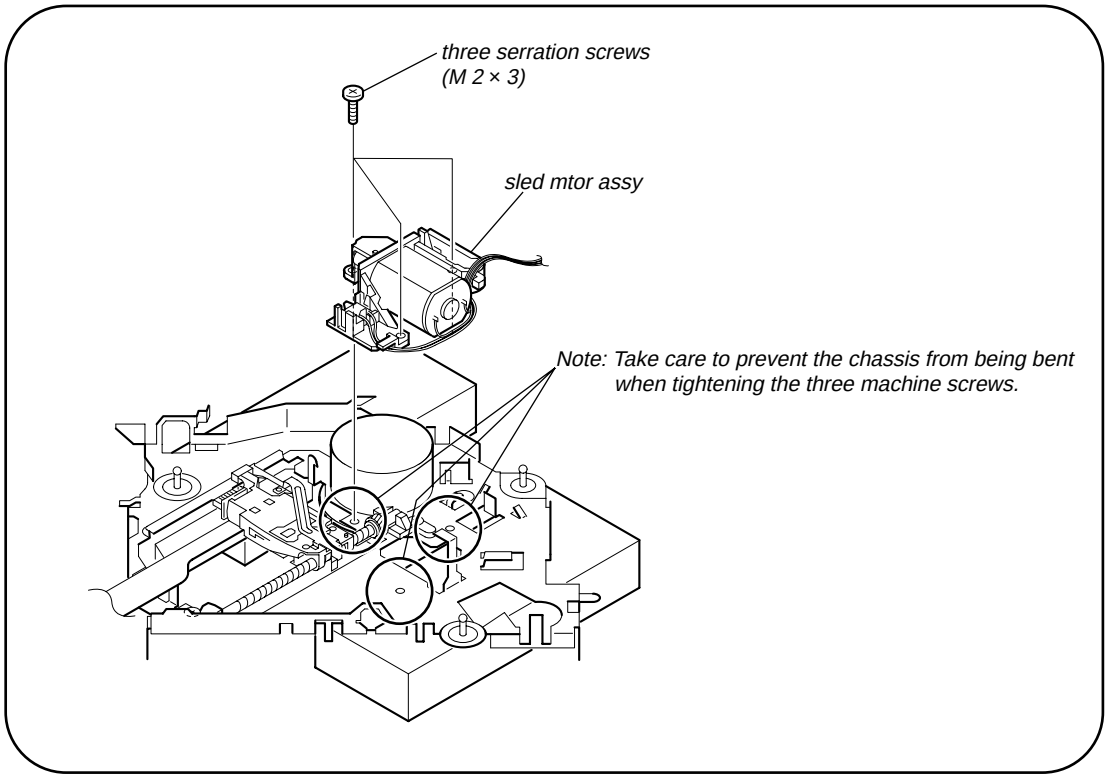

3. OPTICAL PICK-UP SECTION

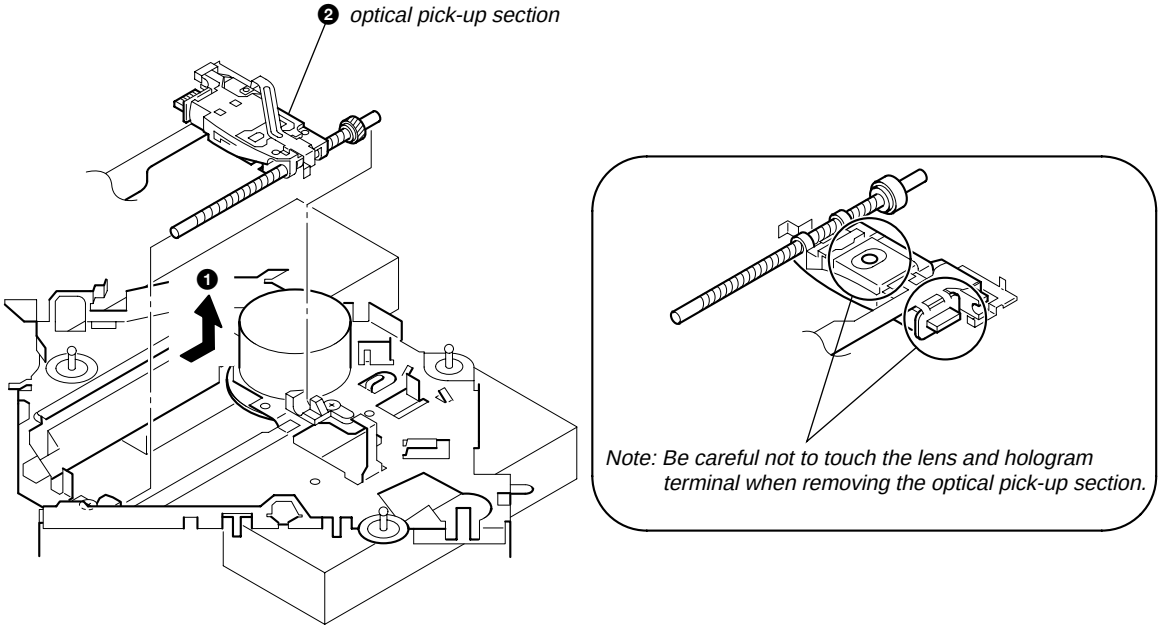

4. OPTICAL PICK-UP

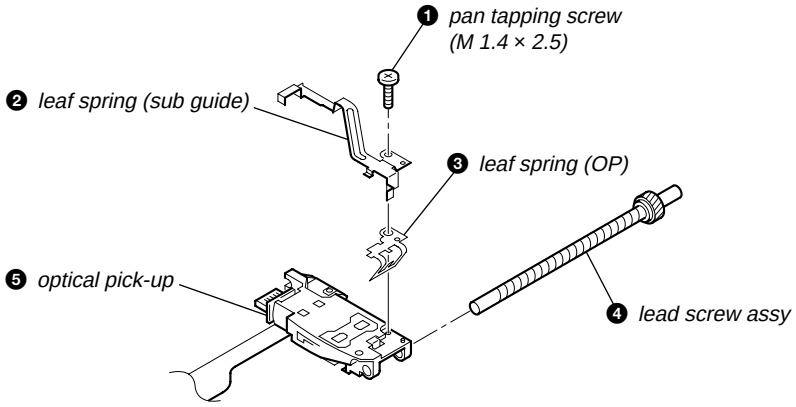

Notes for Assembly

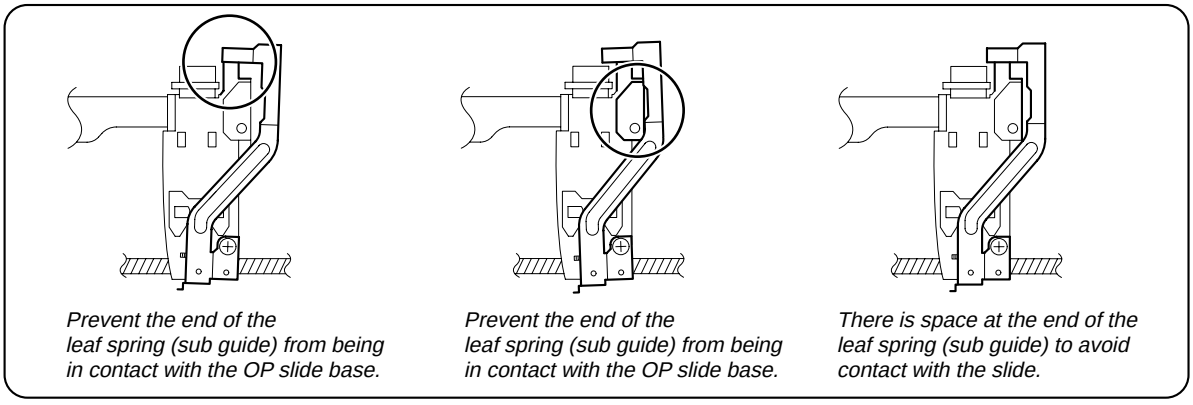

REVISION HISTORY

Clicking the version allows you to jump to the revised page.
Also, clicking the version at the upper on the revised page allows you to jump to the next revised page.

Ver.	Date	Description of Revision
1.0	2006.11	New
1.1	2007.01	Indian model addition to CDX-GT460U.
1.2	2007.03	Change of MARUTI SUZUKI model. (from CDX-GT460U to CDX-GT460US) Notes for removal of the OPTICAL PICK-UP added. (SUPPLEMENT-1) (ECN-ECC05660, ENG-07003)